ZfK-476

PROCEEDINGS
OF THE XIth INTERNATIONAL SYMPOSIUM ON THE INTERACTION OF FAST NEUTRONS WITH NUCLEI

(Automation of Experiments in Nuclear Physics Using Mini- and Microcomputers)

organiced by
the Technical University of Dresden
November 30 – December 4, 1981 in Rathen (GDR)

edited by
P. Eckstein and W. Meiling

July 1982

AKADEMIE DER WISSENSCHAFTEN DER DDR

ZENTRALINSTITUT FÜR KERNFORSCHUNG
ROSSENDORF BEI DRESDEN

ZfK - 476

Proceedings

of the XIth International Symposium on the Interaction of Fast Neutrons with Nuclei (Automation of Experiments in Nuclear Physics Using Mini- and Microcomputers)

organized by
the Technical University of Dresden
November 30 - December 4, 1981 in Rathen (GDR)

edited by
P. Eckstein and W. Meiling

Preface

The international symposia on the interaction of fast neutrons with nuclei which are organized every year by the Department of Physics of the Technical University in Dresden are dedicated alternately to experimental and theoretical problems of neutron phyiscs, to measuring systems and to special aspects of charged-particle reactions. The XIth International Symposium concentrated on application of computers and on experimental techniques in nuclear physics.

Just because of the rapid development of microelectronics the possibilities of on-line data acquisition and data processing were remarkably expanded in last years. Therefore no wonder that most contributions on conferences and symposia with nuclear instrumentation topics are dealing with computer-aided measuring systems or algorithms. This situation is quite different to conferences which were held ten or twenty years ago and on which special problems of analog circuits or nanosecond pulse techniques prevailed in the contributions.

The more than 30 contributions on the XIth Symposium can be arranged into three groups:

1. Hardware and software of computer-aided devices and applications in nuclear physics experiments.
2. Automated measurements and methods of control.
3. Special problems of construction and control of neutron generators and accelerators.

The organizing committee desires that the publication of most of the presented papers are useful for further work in the interesting field of nuclear instrumentation.

W. Meiling
P. Eckstein

Organising Committee:

W. Meiling
W. Grimm
U. Kaiser

Technical University Dresden
Department of Physics
Division of Nuclear Physics

Materials of the previous symposia have been published in:

1971: **Wiss. Zeitschrift TU Dresden** 21 (1972) 691
1972: ZfK - 261 (1973)
1973: ZfK - 271 (1974)
1974: **Wiss. Zeitschrift TU Dresden** 24 (1975) 1351
1975: ZfK - 324 (1976)
1976: **not published**
1977: ZfK - 376 (1978)
1978: ZfK - 382 (1979)
1979: ZfK - 410 (1980)
1980: ZfK - 459 (1981)

ACKNOWLEDGEMENTS

The XIth International Symposium on the Interaction of Fast Neutrons with Nuclei was attended by scientists from five countries who presented 35 original contributions and survey papers.

The organiszing committee would like to thank all participants for their effort and active discussions during the symposium.
The committee expresses the thanks to the University for some support and to the staff of Division of Nuclear Physics for technical assistance. Especially, the committee is much obliged to the Central Institute of Nuclear Research in Rossendorf for the publication of the Proceedings of the XIth Symposium.

Organizing Committee

TABLE OF CONTENTS

LIST OF PARTICIPANTS

Andert, K.	FZAM Berlin	GDR
Benes, E.	TU Wien	Austria
Brazgovna, A.	INR Warsaw	Poland
Drosg, M.	Univ. Wien	Austria
Dienel, S.	ZfK Rossendorf	GDR
Dörschel, B.	TU Dresden	GDR
Eckstein, P.	TU Dresden	GDR
Edmond, R.	Univ. Madagaskar	Madagaskar
Esche, H. J.	ZIS Leipzig	GDR
Filatenkov, A. A.	RI Leningrad	USSR
Försterling, G.	TU Dresden	GDR
Fromm, W. D.	ZfK Rossendorf	GDR
Fülle, R.	ZfK Rossendorf	GDR
Glowaka, L.	INR Warsaw	Poland
Gleisberg, F.	TU Dresden	GDR
Grimm, W.	TU Dresden	GDR
Helfer, H.	TU Dresden	GDR
Hiekmann, S.	ZfK Rossendorf	GDR
Horkay, G.	INR Debrecen	Hungary
Jahn, U.	ZIK Berlin	GDR
Janas	ZIK Berlin	GDR
Karrasch, G.	JINR Dubna	USSR
Kaminski, B.	INR Warsaw	Poland
Kolotuj, V.V.	Acad. Sc. USSR Kiev	USSR
König, K. M.	ZfK Rossendorf	GDR
Kloß, G.	TU Dresden	GDR
Krause, R.	TU Dresden	GDR
Lehmann, D.	Med. Akad. Dresden	GDR
Lenartowicz, J.	INR Warsaw	Poland
Lorenz	SAAS Berlin	GDR
Marianski, E.	INR Warsaw	Poland
Märten, H.	TU Dresden	GDR
Meiling, W.	TU Dresden	GDR
Menzel	VEB Robotron Dresden	GDR
Merla, K.	SAAS Lohmen	GDR
Modes, D.	ZIS Leipzig	GDR
Molnar, J.	INR Debrecen	Hungary
Nefedov, V. N.	NIIAR Dimitrovgrad	USSR
Nesterenko, V. S.	FEI Obninsk	USSR
Paal, A.	INR Debrecen	Hungary
Paffrath, E.	ZIK Berlin	GDR
Paramonov, V. V.	IAE Moskow	USSR
Pöthig, J.	TU Dresden	GDR
Rettelbusch	IHS Mittweida	GDR

Schmidt, D.	TU Dresden	GDR
Schwenkner, W.	TH Magdeburg	GDR
Seeliger, D.	TU Dresden	GDR
Seidel, K.	TU Dresden	GDR
Sepsy, K.	INR Debrecen	Hungary
Steinert, M.	ZIS Leipzig	GDR
Streil, Th.	TU Dresden	GDR
Sztaricskai, T.	Kossuth Univ. Debrecen	Hungary
Unholzer, S.	TU Dresden	GDR
Vasvary, L.	Kossuth Univ. Debrecen	Hungary
Vigerske, W.	Inst.f.chem.Techn. Berlin	GDR
Winkler, P.	VEB Robotron Dresden	GDR

TRENDS IN COMPUTER-CONTROLLED DATA ACQUISITION AND EVALUATION SYSTEMS

Ewald Benes
Institute of General Physics, University of Technology Vienna

ABSTRACT

The implications of the rapid advances in microelectronic technologies on measuring systems are described from the experimental physicists point of view. The consequences on approbriate sensor features are stated and approaches to modular design as well as standardized data ways are described by comparison of the following most common used systems: CAMAC, IEC-Bus (IEEE 488), de facto standardized microprocessor busses and plug in cards (Q-Bus, Multibus, etc.), and local networks (Ethernet, Omninet, etc.). A comparison is also made between data storage media like magnetic tape and cartridge, floppy and hard disk as well as the expected introduction of the optical disk technology. Finally there are three examples of computer controlled physical experiments together with their problem adapted data acquisition and evaluation systems introduced.

1. Introduction

The rapid growth of the functional density in LSI-devices has caused a reversal in the order of the highest over all cost contribution
from CPU → memory → periphery to periphery → memory → CPU
Especially the introduction of CPUs on a single chip and the monotonous decrease in the cost per bit of semiconductor memory together with faster memory access and lower power requirements revolutioned the hardware and software for computer aided measuring and evaluation systems. Even small measuring devices are increasingly equipped with microprocessors and sophisticated operating programs (1). These powerful so called "smart instruments" reduce besides the external control functions the data to be handled.

The possibility of splitting the data processing into a local preprocessing and a centralized off line endprocessing is of great importance for cost reduction, reliability enhancement, local transparency, as well as immediate local failure detection and trouble shooting. Because of the local linearization possibility, integrating of measuring values can be done locally, for instance. The same holds for measuring values deduced from more than one measurand. Hence integration of the primary measurands before the calculation of interesting (deduced) secondary measurands is in general mathematically not allowed, a fully tralized system must transmit a much higher quantity of data to the central e u-ation station. The distribution of intelligence, which was made possible by the microprocessor revolution, allows an immediate significant data reduction.
In the following chapters the trends caused by these perfectly changed possibilities are discussed in general and illustrated by some examples.

2. From the physical measurand to the measuring value

The influences of microelectronics advances to the design of transducers for direct data acquisition may be seen mainly in a change in the pr ority order of preferred sensor characteristics. High reproducability and small hystersis for

instance are much more important than linearity, since the later one can be reached by use of the arithmetic abilities of a microprocessor. The linearisations of platinum resistance and thermocouple thermometers for instance are done in state of the art microprocessor-controlled data loggers by software employing for the least significant bits a proper correction table stored in a ROM. The stored values are directly accessed using some of the most significant bits of the value to be linearized as ROM address.

A sensor with a microprocessor-adapted output-signal should deliver either an analogue voltage representing the measured value or a pulsed voltage with the pulsefrequency resp. count representing the measured value. The projection of the measurand to a corresponding frequency means in general a much higher dynamic range than a projection to an analogue voltage, since in the case of the analogue voltage the relation between measuring range and resolution is at least limited by the analogue to digital conversion (ADC). E. g. using a 12 bit ADC the dynamic range is limited to one in 4096, while this figure is limited in the case that a frequency is representing the measuring value only by the physical properties of the sensor respectively the measuring time.

In the case of low pulse rates the pulse outputs may be directly connected to input port lines of a microcomputer which determines the pulse rate by checking the input line status (high or low) periodically with a maximum sampling rate higher than the pulse rate to be measured and accumulating the indicated changes by software counters (2). This is especially for multiple pulse rate measurements a very cost effective concept, since for 8 pulse rates only one 8 bit input port is needed. In the case of a hardware implementation of the counters one yields a very line intensive solution, e. g. in the case of counters with 6 BCD digits one has to read in for each counter 192 lines which means 24 8 bit input ports.

Often the interesting (secondary) measurand cannot be acquisited by a single sensor, but it must be deduced from some other (primary) measurands. Heat flow for instance is estimated by multiplication of the flow rate with the difference between inlet and outlet temperature, the mass density and the specific heat capacity of the heat transfer medium. This simple example again illustrates the benefits of distributed intelligence, since a local microprocessor is able to calculate immediately the only interesting secondary measuring value. It may even taken into account the temperature dependence of the specific heat capacity and that of the mass density stored in local ROM, thus reducing the data to be carried on the earliest stage possible.

3. Modular design and approaches to standardized data ways

1968/72 CAMAC began as a tool for the nuclear field, where rather large central computers were used, and has had widespread applications over the past decade. Because of the compatibility-advantages of standardized interface modules it also became importance in medical research, physical and chemical laboratory automation, astronomical studies and industrial process control, among many other applications. For many reas n CAMAC (3) is hardly adaptable to the rolling microcomputer revolution. Especially the separate 24 read and 24 write lines, which are even for minicomputers a little too many, and the mechanical card format and direct connector lay-out do not allow a cost effective automation of smaller experiments.

In contrast to CAMAC the IEC-Bus (also known as GPIB "General Purpose Interface Bus") (4) is a standard which accounts for the distributed intelligence of "smart instruments" within a measuring system. The IEC-Bus allows the direct communication between addressed devices and the controller function may be passed from one device to another.
The most important interface functions besides the CONTROLLER are the TALKER and LISTENER which perform the direct data transmission and acception.
The IEC-Bus consists of 16 lines. Eight of the lines (DIO1-8) are used to transmit data in a general meaning, as there are data, addresses, commands. The transmission is performed in a bit parallel, byte serial form, asynchronously and bidirectionally. The remaining eight lines are bus control lines, five of them are bus management lines, three of them (handshake lines) control the asynchronous data byte transfer. The three wire handshake procedure is the most interesting feature of this bus system. It enables the simultaneous communication between more than two devices (e. g. one talker and several listeners) with very differing response times.
The arguments for the stated alliance between the IEC-Bus and the rolling microcomputer innovation are:

- system inherent distributed intelligence
- asynchronous partnership
  allows easy communication between smart instruments with different microprocessor-clock-rates
- 8 Bit data path width
  this is the ideal length for the common character-oriented communication

There are several consecutive steps necessary to establish a connection. After the connection is established, the data rate is up to 1 megabyte per second. Although the system is rather suited for block transfer than for rapid changing data ways it is relatively fast responding to peripherial interrupt requests (serial or parallel poll).
The most exciting feature of the IEC-Bus standard is the formal description of the interface functions which is based on the asynchronous state machine (5). The implementer is encouraged to translate this symbolic representation into a representation with logical (and physical) components according to an optimum performance to cost ratio. Thus the fact, that a state machine is in a certain state may be represented by a certain output code of a set of flip flops, or by a microprocessor that is in a certain routine, etc. Hence the IEC-Bus standard does not suggest any special implementation and is no drag for a rapid technology innovation. Besides CAMAC and IEC-Bus the microprocessor busses and plug in cards of some manufacturers are widely used, second sourced, and have become de facto standards for the modular design of computer controlled measuring systems. The most common used are the Q-Bus (LSI-11 Bus) from DEC (Digital Equipment Corporation) which uses the same 16 lines both for addresses and data and the Multibus from Intel. An extended version of the later one has a good chance to become an IEEE standard (6).
US-ERDA-NIM and ESONE are developing the Fast-Bus in ECL-technology for very fast measuring and control systems.
Microprocessor based measuring systems offer very cost effective problem solutions. Typical for such systems is a clear separation of the data-acquisition

(and precomputation) under real time control of the microprocessor system and an off line data (end-)evaluation. In this case one expensive powerful periphery like lineprinter, graphic display, plotter and magnetic tape station can be used for many experiments. For that it is not necessary to move the periphery from one experiment to the next, it is easier to carry the data stored on magnetic tape cassett or floppy disks. Another possibility for enabling inexpensive CPUs to share expensive peripheral equipment as well as data and software packages are the recently introduced local network architectures.
Terminals, files and I/O-devices can communicate with one another by a fully serial data transmission.
The most interesting examples for local networks are the "Ethernet" from Intel-Rank Xerox-DEC and the Omninet from Corvus Systems, which connects many popular personal computers and minicomputers, from the Apple II to the LSI-11 (7).
While the Ethernet physical link is a 50 ohm coaxial cable of up to 500 m length and the data rate is 10 megabits per second, the Omninet is using a simple twisted pair cable and the data rate is 1 megabit per second.
Both local networks employ a layered architecture according to the forthcoming ISO and American National Institute Reference Model of Open Systems Interconnection.
The Omninet interface is called "transporter" and allows the connection of up to 64 computers or peripheral devices. The transporter implements the first four layers, or levels (physical, data link, network and transport layer). To reduce the burden on the host, the transporter employs a single chip microcomputer which performs many high-level network tasks that are often the responsibility of the host computer in other networks.
At our Institute a very simple, but sufficient type of a local network (8) has been installed already several years ago. It is based on the fact that all the microcomputers and peripheral devices at the Institute have either a RS 232 serial connection or a 20 mA current loop connection. After interfacing the current loops to the RS 232 standard it was possible to couple 10 microprocessor-peripheral pairs and also pairs of microprocessors on a connection board at the physical link level.
Comparing the speed of the described systems, one should discriminate between <u>data rate</u> (block transfer between a given data source and destination) and <u>action rate</u> (transfer of single data between rapidly changing data sources and destinations).
In these terms a fully serial system offers a high data rate while a parallel bus system allows a higher action rate and a low reaction time to service request.
In this sense is the IEC-Bus a very good compromise which is fitting to a great number of measuring tasks.

4. Data storage media

4.1. Main or working memory

The rapid advances in semiconductor technology have caused semiconductor storage to displace core-memory as a consequence of faster memory access, lower power requirements and significantly lower cost per bit reached by semiconductor-technology based RAM (Random Access Memory) and ROM (Read Only Memory). The static (s)RAM is an extremely fast component, but it requires more power and there is about

three times more chip-space required for an sRAM than it is necessary for a dynamic (d)RAM. Hence the integration-densities achieveable with sRAMs will remain a step behind. Already in 1982 it can be expected, that on a per-bit basis at least in the USA the selling rate of 64 k dRAMs will be dominant over that of the 16 k dRAMs, which presently capture the substantially highest share of the mix on the market.

Further advances in RAM technology estimated by leading manufacturers will include single-voltage 16 k dRAMs, 16 k CMOS and 16 k static RAMs. Continued use of core will be limited to applications requiring a nonvolatile memory.

ROMs are not only nonvolatile, but offer higher speeds and densities. ROMs generally contain fixed programs for the control of systems-hardware or in addition programs and utilities such as e. g. BASIC interpreters. Using ROM as a software-storage medium eliminates the transfer time from disk or tape to RAM. However, ROMs consume available memory-adress space permanently, thus decreasing the freely usable main memory. EPROMs can be reprogrammed as needed, but the cost is relatively high.

4.2. Mass storage

For not randomly accessable mass storage of data magnetic tape or tape cassettes are used, where access-time is a minor demand (e.g. program back up and long time data storage), and magnetic disks, where fast accessability is advantegous or necessary. There has been several efforts on standardization of magnetic tape cassettes.While in Western Europe the ECMA 34 (9) magnetic tape cassette storing 32 bp mm (phase encoded) is wide spread used, in the USA the 3M cassette used e. g. in Hewlett Packard desk top calculators has become a de facto standard.

In the field of disk storage are two different technologies in strong competition: "Floppy" or flexible disks, where the magnetic medium is coated on a Mylar plastic foil, and the magnetic head is in close contact to the magnetized film, and hard disks, where the magnetic head is slightly distanced from the film surface.

Floppy disk technology features a very low cost exchangeable data carrier medium which allows a low cost off line mass data and programm conservation. On the other hand, the technology-inherent mechanical abrasion problem, which reduces the reliability significantly, is a disadvantage in applications where the data access frequency is high (e. g. operating system software).

Hard disks originally used only for large computers, has suffered from the introduction of the so called Winchester technology, which is the code name under which it was developed at IBM. The technology has since been adopted by many manufacturers and is characterized by a rail like surface of the head confronting the disk in a distance of half a micrometer. The flow of air under the outside rails generates an aerodynamic force that stabilizes the critical gap between the disk surface and the flexible supported head. Small versions (8-inch with up to 40 Mbytes and 5,25-inch with up to 12 Mbytes storage capacity) of these Winchester fixed-medium hard disks were perhaps the most heavily promoted computer peripheral devices in the last year and are rolling now in large volume production. The 5,25-inch version is available for US$ 1.000,-- and less. The disadvan-

tage of the mostly not exchangable disk storage medium is solved usually by a magnetic tape cassette back up equipment with fitting high storage capacity.

Three further technology improvements can be foreseen (10): The use of magnetic metal films instead of iron oxide, the use of thin film heads and the recording of data in regions of magnetization orientied perpendicular to the plane of the disk, instead of horizontally, the current practice.
Optical disk technology might attain the greatest storage density. It promises to increase the capacity of disks a hundred fold and to reduce the cost of data storage correspondingly. But many issues remains to be resolved that will effect the integration of the optical technology into computer systems.

5. Examples for problem solutions with state of the art computer-controlled data acquisition systems

Since these examples from our Institute were already published in detail elsewhere, in the following the kind of experiment and the computer-relevant equipment is listed only:

- Doppler shift laser spectrometer for measurement of the velocity distribution in neutral atomic beams using the Q-Bus cards LSI11 -CPU + 20 k RAM, Multiplexer, ADC and two DACs, 2 serial and 1 parallel I/O-Interfaces (11)
- Scanning laser beam apparatus for the measurement of mechanical vibration amplitudes of piezoelectric cristals, microphone membranes, ultrasonic transducers, etc., employing IEC-Bus controlled measuring devices and an LSI11-23 microcomputer with 128 kByte main memory and a quadruple floppy disk station (12)
- Stanardized data acquisition system HELIO-DATA based on the Intel 8085 CPU and Multibus-cards (13,14)

6. Acknowledgements

The author thanks Prof.Dr.Rupert Patzelt and Dipl.Ing.Leopold Wimmer for valuable discussions. The classification terms "action rate" and "data rate" have their origin in a suggestion made by Prof.Patzelt. The referenced projects in Chapter 5 were financially supported by the Austrian Science Research Fund (Proj. No. 1800 and 2983) and the Austrian Federal Ministry for Science and Research.

7. Literature

(1) D.Hammer, E.Benes, H.K.Pulker
Thin Solid Films, 32 (1976) 47-50
"Progress in monitoring thin film thickness with quartz crystal resonators"

(2) L.Wimmer, E.Benes, P.Blum
Tagungsberichte der "Informationstagung Mikroelektronik 79" im Rahmen der "IE-79" (1979) Wien
"Meßwertgeber für die Analyse multivalenter solarer Wärmeversorgungsanlagen"

(3) ESONE Stds EUR 4100, 4600 and 5100: CAMAC, A Modular Instrumentation System for Data Handling. Adopted by IEEE Stds 583, 595 and 596.

(4) IEEE Stds 488-1975: Standard Digital Interface for Programmable Instrumentation. *DIN-IEC 66.22*

(5) D.C.Loughry
ISA Transactions 14/3 (1975) 225-230
"A New Instrument Interface: Needs and Progress toward a standard"

(6) IEEE (USA) Projekt P 796

(7) M.Halm, P.Belanger
Electronics, Aug. 25/1981
"Network minimizes overhead of small computers"

(8) K.C.Harms, P.Berlinger
Tagungsberichte der "Informationstagung Mikroelektronik 79" im Rahmen der "IE-79" (1979) Wien
"Zentrale Computer/Peripherie-Schnittstelle nach dem Kreuzschienenverteilerprinzip"

(9) ECMA: European Computer Manufacturers Association, Standard 34: Data Interchange on 3,81 mm Magnetic Tape Cassette (1973)

(10) R.M.White
Scientific American, Aug. 1980
"Disk-Storage Technology"

(11) W.Husinsky, E.Benes, P.Blum
Tagungsberichte der "Informationstagung Mikroelektronik 77" (1977) Wien
"Eine Datenerfassung und Prozeßsteuerung für ein Atomstrahlgeschwindigkeitsspektrometer unter Verwendung eines LSI 11 Mikroprozessors"

(12) L.Wimmer et.al.
Tagungsberichte der "Informationstagung Mikroelektronik 81" (1981) Wien
"Messung der Amplitude schwingender Oberflächen mittels Laserstrahl-Abtastung"

(13) E.Benes et.al.
Proc. Izmir International Symp. II on Solar Energy Fundamentals and Applications (1979) Izmir, Turkey
"Standardized data acquisition package for the analysis of multi-component solar heating systems"

(14) E.Benes et.al.
Proc. of the 1st Symp. of the IMEKO TC-8 on Metrology: Metrological assurance of measurements for enviroumental control (1981) Leningrad, USSR
"A microprocessor-controlled measuring system for the acquisition and recording of environmental parameters"

EIN MODULARES, AUTONOMES MIKRORECHNERSYSTEM IM CAMAC-STANDARD UND TYPISCHE EINSATZBEISPIELE IM LABORATORIUM FÜR HOHE ENERGIEN DES VIK DUBNA

L. Rettelbusch, T. Nemes, H. Rapp

Zusammenfassung

Im LHE des VIK Dubna wurden mikroprozessorgesteuerte und mikroprogrammierbare CAMAC-Moduln entwickelt, welche mit entsprechenden Speichereinheiten, Interface-Moduln und peripheren Geräten ausgerüstet, sowohl als Mikrorechnerentwicklungssysteme als auch als Prozeßsteuereinheiten im CAMAC-Standard eingesetzt werden können.
Im Vortrag werden typische problemangepaßte Hardware- und Softwarekonfigurationen vorgestellt und diskutiert. Ein Beispiel davon ist in der Arbeit enthalten.

1. Einleitung

Der gegenwärtige Entwicklungsstand der Halbleitertechnik erlaubt die Schaffung kleiner, billiger aber leistungsfähiger Rechenmittel, welche insbesondere in Verbindung mit Standardinterface-Systemen breit gefächert einsetzbar sind und vielfältige Steuerungs- und Rechenaufgaben lösen können. Solche Systeme sind in der Regel sowohl in der Hardware als auch in Software modular aufgebaut und lassen sich unterschiedlichen Aufgabenstellungen optimal anpassen.

Zu den Mikrorechnerentwicklungen im CAMAC-Standard zählt auch das im LHE des VIK Dubna ausgearbeitete System MISKA /1/2/3/4/. Die systemeigenen Blöcke sind auf der Basis der in der UdSSR zur Verfügung stehenden Mikroprozessorbausteine realisiert. Die vorliegende Arbeit enthält eine Zusammenstellung der wichtigsten Systemkomponenten von MISKA. Aus den Einsatzbeispielen wurde ein kleines autonomes System ausgewählt und etwas näher betrachtet.

2. Beschreibung des Systems MISKA

Die Hardwarekonzeption des autonomen Mikrorechnersystems MISKA ist aus Bild 1 zu ersehen. Zum System gehören folgende Blöcke:

- Autonomer Crate-Kontroller auf der Basis des µP K580-IK80 (I 8080)
  Der autonome Kontroller nutzt den CAMAC-Datenweg zeitmultiplex als Mikrorechner-BUS wie auch als CAMAC-Magistrale. Das CAMAC-Interface des Kontrollers erfüllt die Standards EUR 4100 und 6500. Für den Anschluß von Steuerkonsolen oder zur langsamen Datenübertragung ist ein Serialkanal nach CCITT V. 24 enthal-

ten. Die Unterbrechungssteuerung nutzt 8 Unterbrechungsebenen, davon sind 4 durch das Betriebssystem belegt. Das Zusammenwirken mit anderen Kontrollern wird über eine entsprechende HOLD-Steuerung organisiert.

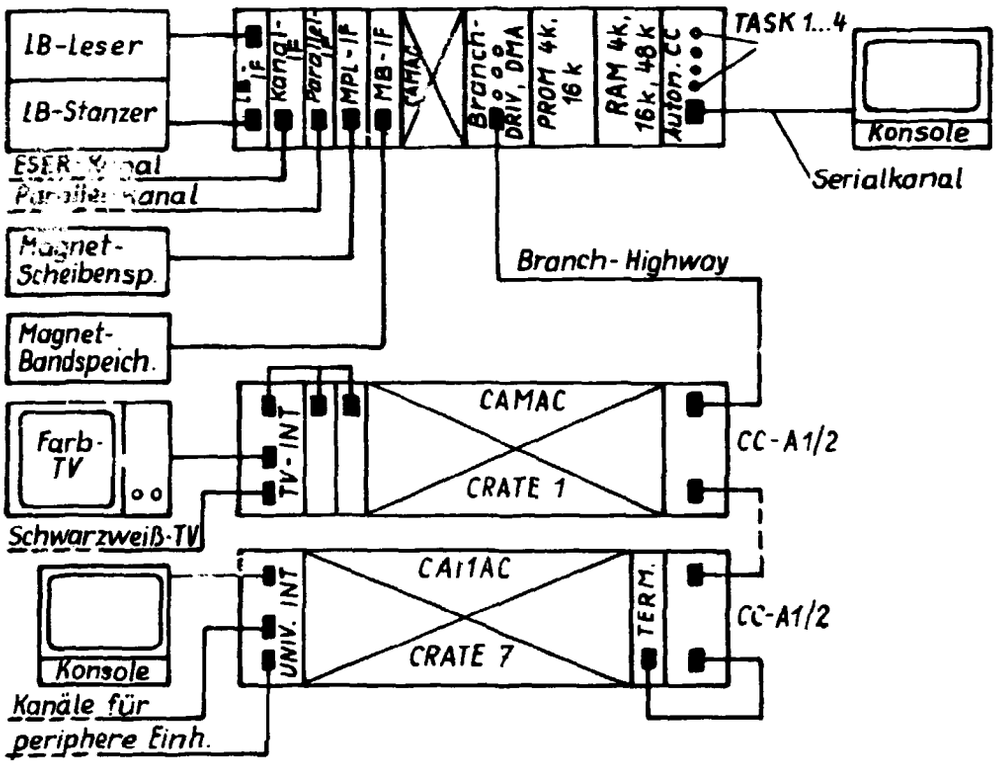

Bild 1 Blockschaltbild des Systems MISKA

- 4-kByte statische Speicher, 16- und 48-kByte dynamische Speicher auf der Basis der Bausteine K565-RU1, RU2, RU3.
- Branch-Driver-Block nach Standard EUR 4600, kombiniert mit einem DMA-Kontroller für die Ausführung schneller CAMAC-Befehlsfolgen und Blockübertragungen im Repeat-Mode. Der DMA-Kontroller hat vollen Zugriff zum Mikrorechnerspeicher.
- Kanalinterface für den Anschluß des Systems an ESER-Kanäle auf der Basis eines mikroprogrammierbaren Automaten, der die Austauschbeziehungen mit dem Eser-Kanal selbständig organisiert.
- Interfaceblöcke für den Anschluß von Massenspeichern
- CAMAC-Interfaceeinheiten für den Anschluß von Lochbandtechnik, Schwarzweiß- und Farbfernsehempfängern, Konsolen, Druckern, Keyboards, Koppeleinheiten usw.
- Universell einsetzbarer CAMAC-Interface auf der Basis des Mikroprozessors I8085 mit den typischen Merkmalen eines E.-A.-Rechners. Dieser Block kann auch als Mikrorechner mit peri-

pheren Einheiten selbständig arbeiten. Der transparente Pufferspeicher für den Datenaustausch umfaßt 16 kByte.

Zur Software des Systems MISKA gehören allgemeine Programm-Moduln, wie sie in 8080-Entwicklungssystemen zu finden sind und auch eine Reihe nutzbarer einsatzspezifischer Programme, die einem Nutzer die Anpassung des Mikrorechners als CAMAC-Steuerungs- und Rechensystem erleichtern soll. Die Struktur der Software ist im Bild 2 gezeigt.

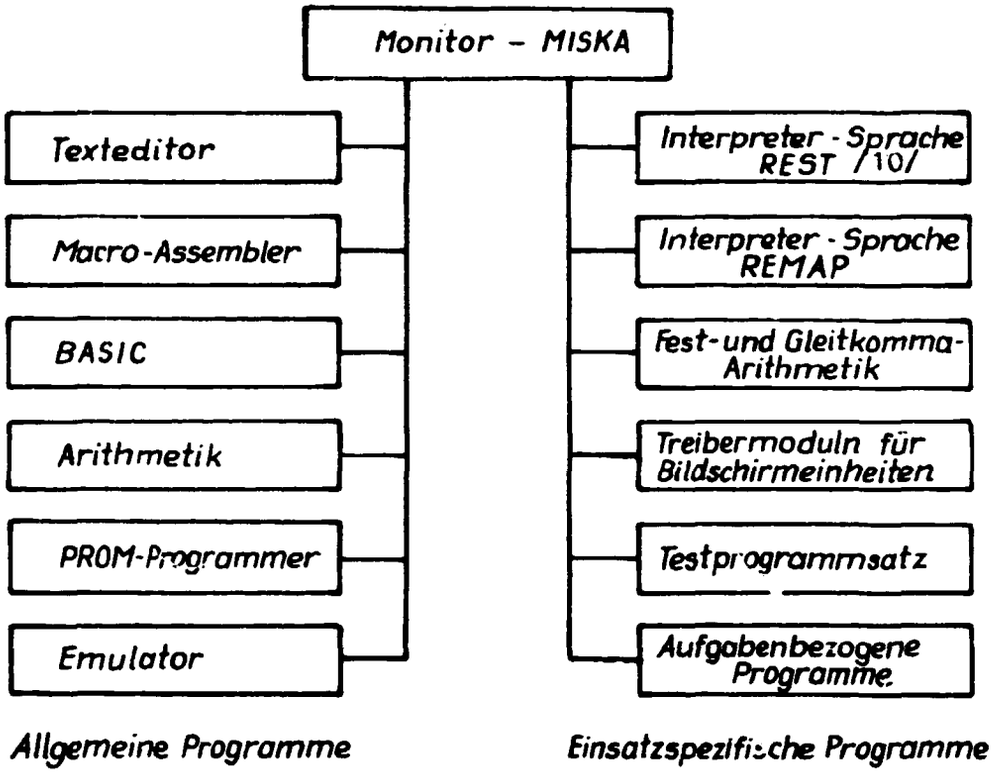

Bild 2 Softwaremoduln des Systems MISKA

Je nach Einsatz und Ausbaustufe ist auch die Softwarekonfiguration auswählbar. Als Standardschnittstelle für die Programme sind die Monitorschnittstellen des Entwicklungssystems MDS-300 definiert. Damit ist eine große Zahl von Programmen anderer 8080/8085-Systeme nutzbar. Insbesondere die systemeigenen Interpreter haben sich infolge der relativ leichten Programmierbarkeit in Steuerungssystemen, wo Echtzeitanforderungen keine wesentliche Rolle spielen, außerordentlich bewährt.

3. Anwendungsbeispiele

Das Mikrorechnersystem MISKA ist vorgesehen und eingesetzt:

- zum Datensammeln und Datenverdichten in Experimenten der Hochenergiephysik,
- zur Lösung von Überwachungsaufgaben im Experimentierbereich,
- zur Steuerung und Überwachung von Basiseinrichtungen,
- als Rationalisierungs- und Prüfmittel bei der Herstellung von Leiterplatten,
- als Terminalstation oder Vermittlungsrechner in Mehrrechnerkonfigurationen

Entsprechend der zu lösenden Aufgabenstellungen werden die zum Mikrorechner gehörenden Moduln mit CAMAC-Blöcken aus dem vorhandenen Angebot ergänzt. Solche Einsatzfälle sind zum Beispiel in den Arbeiten /2/3/4/5/6/7/ beschrieben worden.

Als ein typisches Anwendungsbeispiel für ein autonomes Rechensystem wird im folgenden die Monitorierung des inneren Strahls am Synchrophasotron des VIK Dubna näher beschrieben.

Für die Operatoren am Synchrophasotron ist die Kenntnis des Strahlintensitätsverlaufs und die Intensitätsverteilung in der Beschleunigerkammer wichtig, um in der Anlaufphase und während des Betriebes optimale Arbeitsparameter einzustellen. Zur Messung dieser Größen wurden 24 Indikatoren radial im Beschleunigerring angeordnet /8/9/. Die von ihnen abgegebene Impulsrate ist ein Maß für die Intensität am Meßort. Eine mögliche geometrische Intensitätsverteilung zu einem bestimmten Zeitpunkt ist im Bild 3 dargestellt worden.

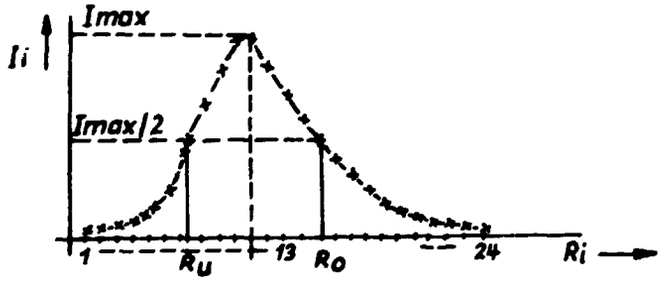

Bild 3 Radiale Intensitätsverteilung im Beschleunigerring

Um dem Operator leicht verständliche und gut zu übersehende Strahlparameter anzubieten, wurden die Gesamtintensität, der Schwerpunkt des Strahls und die Halbwertsbreite für jeden Abtastpunkt ermittelt und als Zeitverlauf auf Speicheroszillo-

graphen dargestellt. Die Abtastrate muß, um den Prozeß möglichst unverfälscht wiederzugeben, den Bedingungen des Abtasttheorems genügen. Der Rechner erfüllt diese Echtzeitanforderungen, wenn er in einem Abtastzyklus die angebotenen Daten in gewünschter Weise verarbeiten kann.

Es werden folgende Rechnungen ausgeführt:

1. Intensität $I = \sum_{i=1}^{24} Ii$

2. Schwerpunkt $S = \frac{1}{I} \cdot \sum_{i=1}^{24} Ii \cdot Ri$

3. Halbwertsbreite $\Delta AR = Ro(Imax/2) - Ru(Imax/2)$

Für die Lösung des Problems wurde die folgende Struktur ausgewählt (Bild 4):

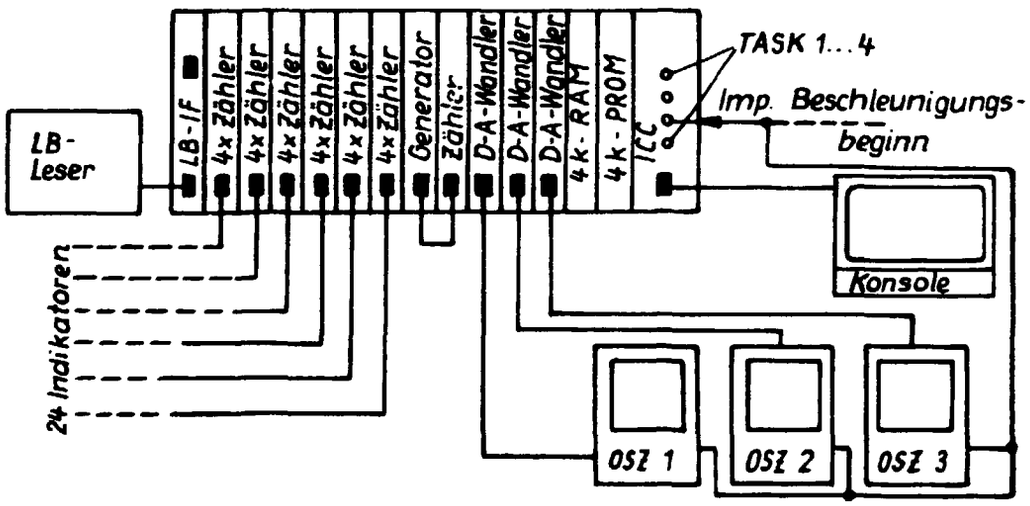

Bild 4 Autonomes System zur Monitorierung der Strahlintensität am Synchrophasotron des VIK

Um die Echtzeitanforderungen zu erfüllen, wurde ein speziell zugeschnittenes Anwenderprogramm ausgearbeitet. Der Operator führt nur wenige Bedienungsfunktionen aus. Für den organisatorischen Ablauf wurden die freien Unterbrechungsmöglichkeiten des autonomen Kontrollers genutzt.

TASK 1: Initialisierung des Systems und Abwicklung eines Eingabedialogs zur Festlegung einer Abtastzeit ($Tn \geq Tnmin$)

TASK 2: Initialisierung des Systems und Arbeit mit der festen Abtastzeit Tnmin

TASK 3: Start eines Meßzyklus mit den vereinbarten Abtastzeiten durch den Impuls "Beschleunigungsbeginn"

TASK 4: Aufruf eines Systemtestprogramms mit Dialogen zur Einstellung der Empfindlichkeit der Einrichtungen und zur Funktionsüberwachung der Blöcke. Das Testprogramm enthält z.B. einen programmierten Handkontroller.

Einschließlich eines kleinen Betriebssystems "Monitor" war für Daten und Programm ein Speicherumfang von 8 kByte erforderlich (4k-PROM, 4k-RAM).

Die minimal mögliche Abtastzeit des Systems ist festgelegt durch die Abfragezeit der Zähler und die Verarbeitungszeit der Informationen (T1) und die Abfragezeit der Zähler (T2).

$$Tnmin = T1 + T2$$

Bei Arbeit mit minimaler Abtastzeit ist die Zählerarbeitszeit (T3) T3 = T1, bei gewählter größerer Abtastzeit T3 > T1. Die möglichen Verhältnisse sind im Bild 5 angedeutet.

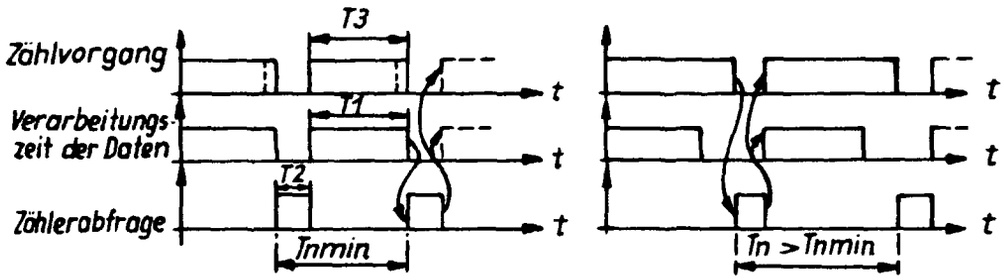

Bild 5 Zeitdiagramm der Abtastung der Meßwerte

Das reale System gestattete eine minimale Abtastzykluszeit von Tnmin = 3 ms, d.h. es werden etwa 330 Abtastungen/s realisiert. Über eine Gesamtmeßzeit von 5 s innerhalb eines Beschleunigungszyklus von 3 s Dauer werden ungefähr 1650 Meßpunkte gesammelt. Die Zusammenstellung eines solchen kleinen autonomen Rechensystems einschließlich der Programmierung erfordert unterden Bedingungen des VIK Dubna etwa 4 Personen . Monate.

Für den Operator ergeben sich die Oszillogramme für den Intensitätsverlauf und die Verteilung in einer im Bild 6 dargestellten Form.

4. Zusammenfassung

Das vorher beschriebene Beispiel ist eine typische Anwendung für MISKA als autonomes System unter Echtzeitanforderungen. Insbesondere zur Bildung von CAMAC-Befehlen sind im programmierten

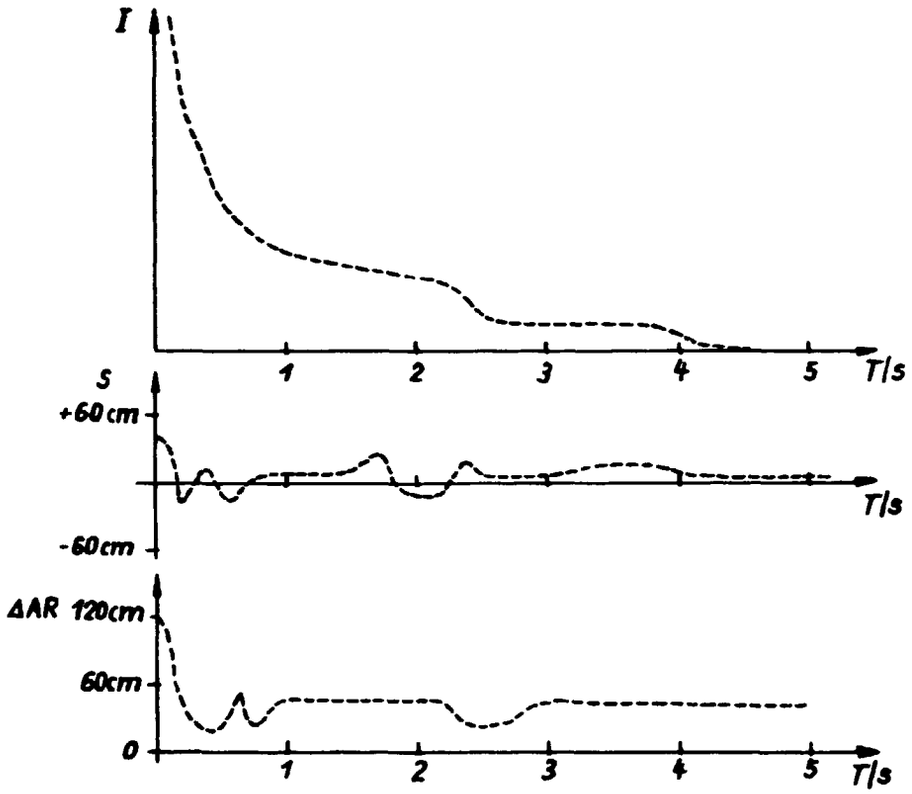

Bild 6 Prinzipverlauf der Meßergebnisse über der Zeit

Betrieb größere Zeitaufwendungen erforderlich. Im Zusammenwirken mit dem DMA-Kontroller des Systems können diese langsamen Teile mit maximaler CAMAC-Geschwindigkeit ausgeführt werden, so daß sich dieser Nachteil weitgehend ausgleicht. Die Beschleunigungszeiten am Synchrophasotron (0,5 s Experimentierzeit und 9 s Zykluszeit) erlauben aber durchaus den Einsatz kleiner autonomer Systeme in anspruchsvollen Experimenten. In jedem Falle ist es aber sinnvoll, eine Experimentetestung vorzunehmen und dem Mikrorechner im laufenden Experiment Aufgaben eines Endprozessors zuzuordnen.

Mit dem Mikrorechnersystem MISKA steht im LHE des VIK Dubna ein kleines aber leistungsfähiges Steuerungs- und Rechensystem zur Verfügung, welches in der Prozeßdatenerfassung und -verarbeitung einsetzbar ist und das seinen Leistungsumfang auch in verschiedenen anderen Anwendungen nachgewiesen hat.

5. Referenzen

/1/ T. Nemes: Autonomer Crate Controller des Typs KKI-661 (in russischer Sprache)
VIK Dubna, 10-12106, 1979

/2/ T. Nemes, H. Rapp, L. Rettelbusch, W.M. Slepnew: MISKA - ein Mikrorechnersystem im CAMAC-Standard ...
(in russischer Sprache)
VIK Dubna, 10-12077, 1979

/3/ T. Nemes, L. Rettelbusch, H. Rapp: Real-Time Application Examples of the Intelligent Crate Controller Type KKI-661 at the JINR Dubna
Real-Time Data 79, H. Meyer editor, North-Holland Publishing Company, Brussels and Luxembourg 1980, S. 583 ... 586

/4/ L. Rettelbusch, T. Nemes, H. Rapp: Mikrorechner Mischka
Fernmeldetechnik 19 (1979), H. 4, S. 143 ... 148

/5/ T. Nemes, H. Rapp, L. Rettelbusch, W.M. Slepnew: Einsatz des Mikrorechners MISKA am Synchrophasotron des VIK Dubna
(in russischer Sprache)
Nowosibirsk, Gesamtsowjetische Konferenz "Automatisierung der wissenschaftlichen Forschung auf der Grundlage von Rechneranwendungen, Juni 1979, Protokollband

/6/ L. Rettelbusch, H. Riedner: Terminalstation für die Rechenanlage ES-1040 (in russischer Sprache)
VIK Dubna, 10-80-798, 1980

/7/ Choan Kao Sung u.a.: Autonomes Mikroprozessorsystem im CAMAC-Standard für die Messung von Energieverlusten in supraleitenden Kabeln und Impulsmagneten (in russischer Sprache)
VIK Dubna, 10-12917, 1979

/8/ Alekseew W.F. u.a.:
VIK Dubna, 9-11389, 1978

/9/ Wolkow W.I. u.a.:
VIK Dubna, 10-11390, 1978

/10/ Basiladse S.G. VIK Dubna, 13-13031, 10-80-791, 1980

Autoren:

Doz. Dr.-Ing. Ludwig Rettelbusch, IH Mittweida, VIK Dubna

Dipl.-Ing. Tibor Nemes, KFKI Budapest, VIK Dubna

Dipl.-Ing. Horst Rapp, VEB Kombinat Robotron Dresden, VIK Dubna

MULTICHANNEL ANALYSER IN CAMAC USING XFKI INTELLIGENT CRATE CONTROLLER

A. Paal, K. Sepsy, S. Szalai*

Institute of Nuclear Research of the
Hungarian Academy of Sciences, Debrecen ;
*Central Institute for Physics, Budapest

Abstract

A multichannel analyser in CAMAC instrumentation standard is described for nuclear physics experiments. It is based on an Intelligent Crate Controller (ICC) with an Intel 8080 microprocessor. For the acquisition of experimental data we designed a fast "front-end" preprocessing system which consists of a nuclear analog to digital converter (ADC) and a dedicated memory connected by a dedicated bus. The microprocessor does not play any role in the data storage process which has direct access to the memory.

Introduction

In the Institute of Nuclear Research at Debrecen a Cyclotron Laboratory will be operational in the middle of 80's first of all for nuclear physics experiments. Its data acquisition and evaluation system will consist of a host computer and some autonomous subsystems in CAMAC. The subsystem will be practically a flexible multichannel analyser with collecting data from nuclear ADCs displaying one or more spectra and having the possibility of preprocessing. In this work the present state of the CAMAC subsystem and its software is described.

Hardware design

At the cyclotron the event rate projections and the resultant data acquisition requirements for a number of proposed experiments need a special solution for the data handling system. The projected data throughput requirement for the "front-end" processing multichannel analyser ranges from 5 to 10 times that obtainable with conventional CAMAC/minicomputer implemented systems 1).

One of the available solutions to the requirements is using distributed intelligence and dedicated memory moduls with CAMAC Dataway independent memory access. Our system has a minimal configuration consisting of a crate controller, a memory modul, and ADC, a data memory, a display unit, a scaler-timer and peripherial devices (Fig.1). We use a 12 bit ADC type CAM 4.04-1. Its conversion gain, digital back bias and the resolution can be changed with the help of CAMAC instructions. Parallel information from ADC is fed to a 4096 word

x 24 bit data store which has a dedicated bus for CAMAC Dataway independent memory access. Using this front panel data bus up to four memory modules can be coupled together forming a 16384 word memory unit. From the Dataway and also from the external data bus the content of any arbitrary store cell can be read, over written, incremented, decremented or modified in an external modul depending on the state of control register bits by CAMAC instructions. Using the other bits of the control register the data memory can be segmented as many as 16 memory groups. These instructions are generated by the Intelligent Crate Controller (ICC) developed by KFKI 2). This ICC modul comprises an Intel 8080 microprocessor besides executing its instruction set controls the Dataway both in CAMAC and Intel mode sharing the same physical lines. A serial port is also built into it to connect a teletype. The ICC has no memory, but there are different types of memory modules using the Dataway as an Intel bus. Our system has 60 kByte RAM and 4 kByte ROM memory modul. For the presentation of the measured data, displaying of a single or two simultaneous spectra - for both X axes 256 picture elements - and of certain additional information as data of calibration, measuring parameters, calculated data, etc. a TV raster is used together with a TV-Display Driver module developed in KFKI. The driver having its own memory is controlled by its own dedicated processor. For this reason the ICC is not burdened with the task of continuously refreshing the alphanumerics and spectral data. The interactive evaluation of spectra is possible with the help of markers and brighter, intensified points used to mark a given region of the spectra.

The clock and live time generated by a Scaler-Timer CAMAC modul are also displayed on the TV-monitor.

Software

The intelligent data acquisition system is supported with a disc operating system 3). This provides for disc management and program construction, storage, editing, assembling, and debugging. As a high level language BASIC interpreter is used 4).

As the ICC's processor is not burdened with the data collection and the task of continuously refreshing CRT display, it leaves more time for 8080 to perform the following tasks.

1. To entry the parameters of the CAMAC modules and a given measurement by means of display and keyboard. A menu driven dialogue can modify the ADC conversion gain and resolution, the assignment of a memory sector to the collected spectra, and different time preset modes, display format etc.

2. The display task provides a flexibile access to data for display and manipulation by means of the TTY keyboard. One or two graphs of spectra can be displayed. There are dual blinking cursors on the graph. The cursor position and count are continually updated on the screen. With the help of the keyboard the cursors can be moved, and the vertical display format can be adjusted in binary steps. Multiple Regions of Interest (ROI) can be defined by the cursors. On a high resolution spectra for detailed examination it is possible to expand it on the upper graph (Fig.2). Bidirectional movement of this window is also

provided along the total spectra. The display program permits both logarithmic and square root vertical scaling in addition to linear one.

3. The MCA software has a 1st order calibration of the horizontal axis. There are possibilities to determine peak centroid location and net area computing with linear background subtraction. For these calculations peaks must be selected by ROI-s. For further analysis fractional spectrum stripping, spectrum normalization and 5 point smoothing can be executed.

4. In the MCA software a disc I/O program is included to save and restore complete data files for later review and analysis. The data files also contain all setup parameters assigned to measurements.

We have CAMAC-BASIC interpreter as a high level language. The run-time of programs written in BASIC in some cases are too slow. For this reason programs related to data acquisition and display functions are written in 8080' assembly language. They can be embedded in CAMAC-BASIC using them as callable subroutines.

REFERENCES

1) A.J. De Raaf: Nucl. Instr. and Meth. 163 (1979) 313
2) ICC User's Manual
3) DOS-80 Operating System Vol. I-II.
4) CAMAC-BASIC interpreter for ICC

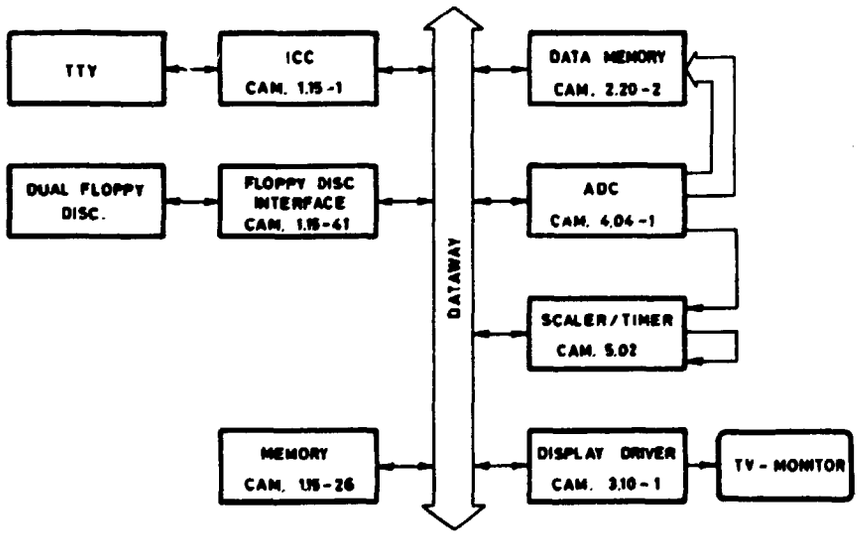

Fig.1 MCA Hardware configuration

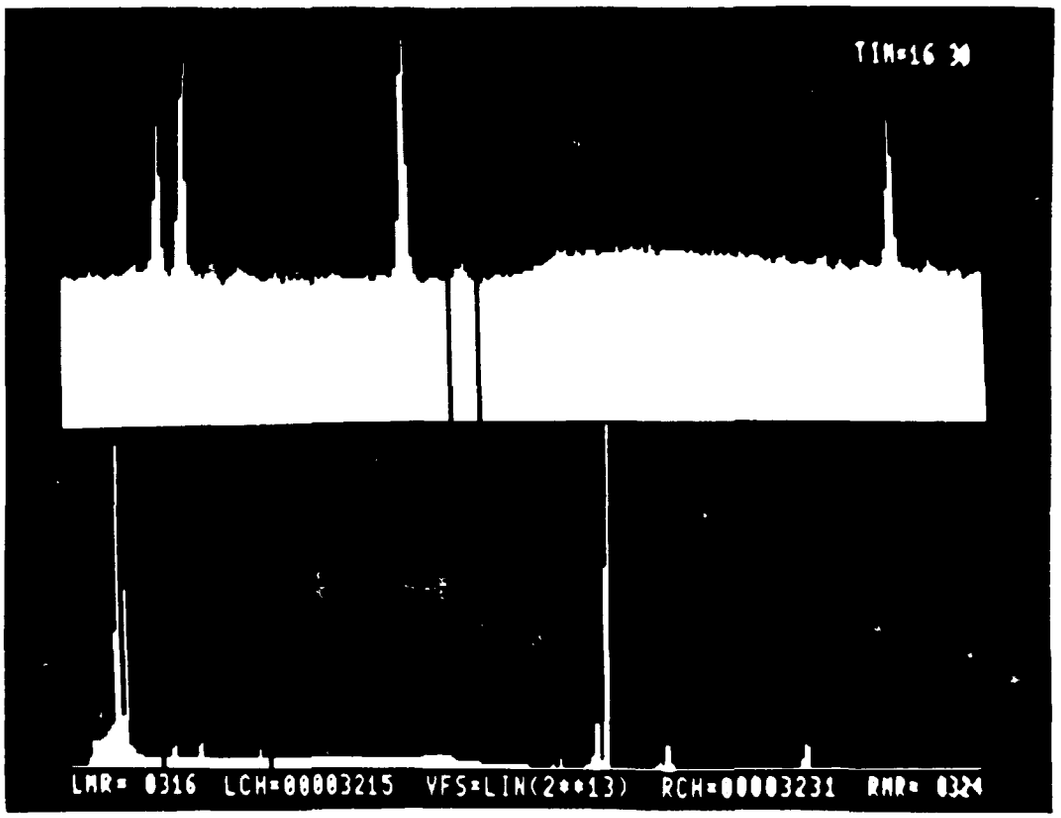

Fig.2 Display format

CAMAC-MODULE "MEMORY" FOR USE IN NUCLEAR PHYSICS MEASUREMENTS

F. Gleisberg, F. Bormann[1], F. Weidhase[2]

Technische Universität Dresden, Sektion Physik, GDR - 8027 Dresden

[1] now VEB Elektronik Gera

[2] now VIK Dubna CCP

The memory 1540 is an universal CAMAC module of single width [1] . It was developed for use in nuclear physics measurements essentially. However, it is possible to apply the memory 1540 otherwise for the purpose of storing a multitude of data in a short time as well as recording an experimentally determined spectroscopical distribution. In connection with an analogue-to-digital converter (ADC) or a time-to-digital converter (TDC), the module represents a multi-channel analyzer, i.e. without organization by a computer.

The live representation of the spectrum during the accumulation is feasible by an internal display driver. The storage capacity amounts to 4 k or 16 k words. This depends on the memory circuit used. The block diagram of the module is shown in fig. 1. The memory array includes 24 dynamic RAM-circuits with 4 k x 1 bit or 16 k x 1 bit organization. The control unit of the module 1540 arranges the timing as well as the multiplexing of the data and address bus, supervises the refresh and controls the increment logic.
The data register buffers the input or output data and increments the data word of a selected address in the analyzer mode. The address register buffers the input data (channel number) in the analyzer mode or the actual address in the block-transfer mode. The display driver realizes the representation of the memory contents by an usual oscilloscope and organizes the refresh of the dynamic RAM-circuits. The data word which is stored under the address appointed by the refresh register, is loaded in the display register. Based on it a digital-to-analogue converter generates a signal for the vertical deflexion of the oscilloscope. The horizontal deflexion and the blanking of the electron beam is arranged by the display driver, too.
The represented memory area comprises 1024 words. It is selectable from the complete address range. A second area can be superposed for comparison.
The scale factor is adjustable logarithmicly in four steps.

The memory module can operate in six modes which are adjustable by a three-bit word in the control register:

1. Block-transfer dataway input: 24 bit words are transfered from the CAMAC-dataway into the memory module.

2. Block-transfer dataway output: 24 bit words are readed out from the memory across the CAMAC-dataway.

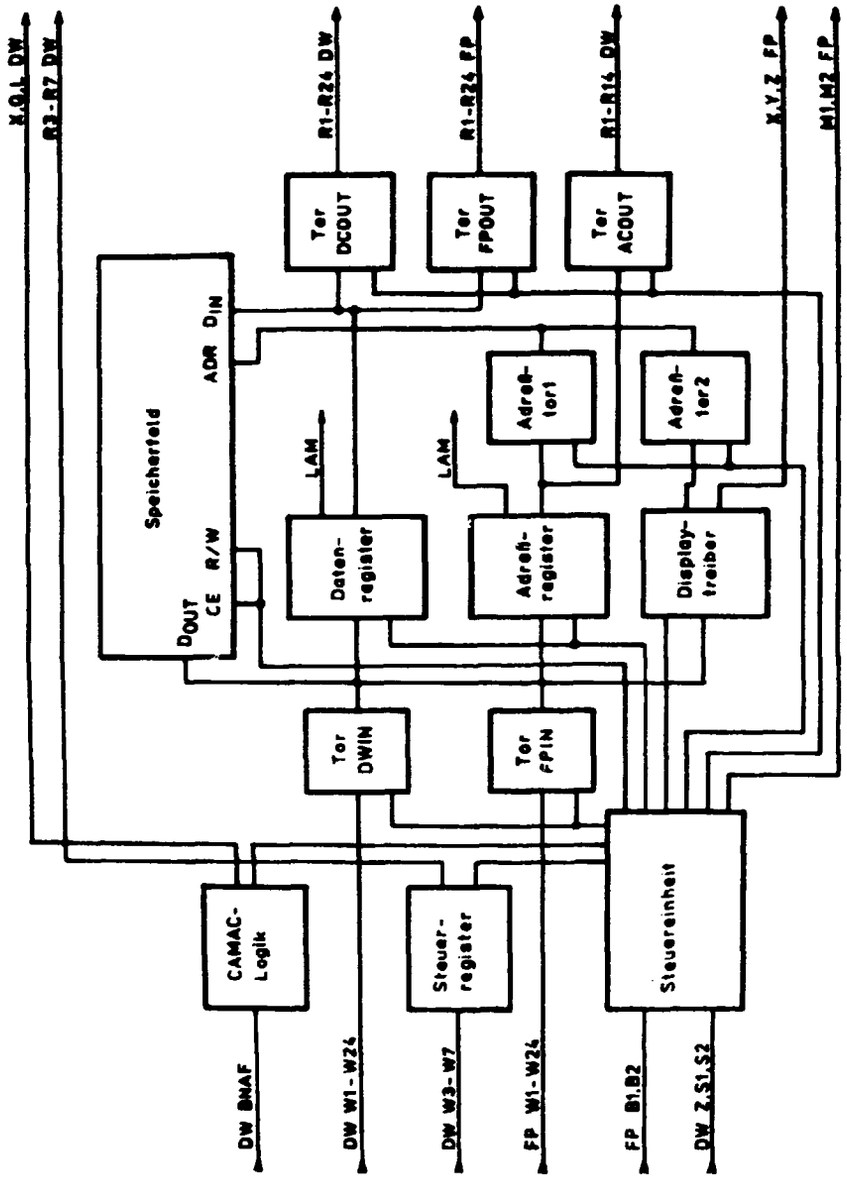

Fig. 1: Blockdiagram of the memory . dule 1540

3. Block-transfer front-panel input: 24 bit words are written into the memory across the front-panel connector.

4. Block-transfer front-panel output: 24 bit words are readed out from the memory across the front-panel connector.

5. Analyzer mode front-panel input: 12 or 14 bit datawords are transfered from the front-panel connector into the address register. The data word which corresponds to this address will be incremented in the data register and filed again on the same address.

6. Analyzer mode dataway input: 12 or 14 bit words are transfered across the CAMAC-dataway into the address register. Thereupon, the adequate data word in the memory will incremented.

In the modes 1 - 4 the storage address is incremented automatically after each read or write cycle. The first address of a memory area has to be appointed by a CAMAC-command.
Independend of the operation mode, the representation of a selected memory area is possible at an oscilloscope. The superposed representation of two memory areas can be set by a fourth control-word bit.

In the following some possibilities for the use of the memory module 1540 are presented:

1. Application of the memory in connection with an ADC or a TDC as a fast multi-channel analyzer (fig. 2). Pulse rates up to 600 kHz are convertable by the direct front-panel connection of the ADC with the memory module. The spectrum can directly represented at an oscilloscope. A reference spectrum can be superposed at request. This gives the possibility to observe the increasing spectrum and to a qualitative supervision.

2. Application of the memory module as a multi-channel analyzer in connection with the CAMAC-dataway. In this mode, it is possible to check the data from the ADC or TDC by a computer before the composition of the spectrum.

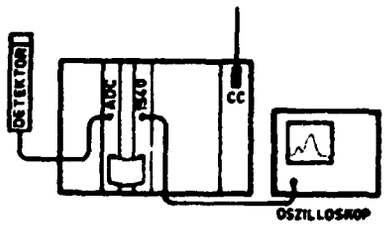

Fig. 2: Multichannel analyzer configuration

3. Event storage
   The data words received from an ADC are stored in the memory successively. It is possible to connect two 12 bit ADC's across the front-panel connector and to store complementary events on the same memory location (fig. 3). For this purpose a second handshake input on the front-panel connector is available. It is AND - connected with the first one.

4. Memory module 1540 used as a buffer store for the seriell Link module 1470 [2] (fig. 4). In this mode, the memory can receive or transmit data across the Link module without handling by the computer in this time.

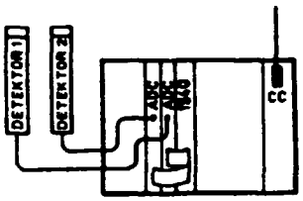

Fig. 3: Two-dimensional event storage

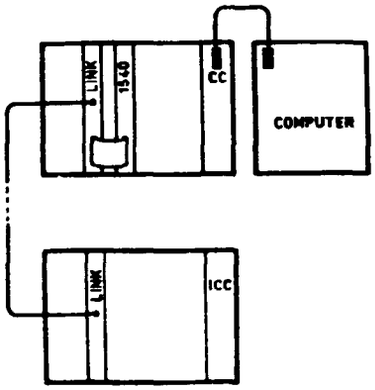

Fig. 4: Memory 1540 as a buffer store of the Link 1470

References:

/ 1 / F. Bormann: Diplomarbeit, TU Dresden, Sektion Physik 1981

/ 2 / F. Weidhase, M. Borkenhagen, K. Faulstich, S. Hiemann: Anwendungsmöglichkeiten und Konzeption des seriellen Link-Moduls 1471, Preprint TU Dresden, 05-28-73, 1978

REAL-TIME CDL - THE CONCEPT OF A PROGRAMMING LANGUAGE FOR PROCESS CONTROL

M. Fischer, Technische Universität Dresden

Abstract

In this short report is giving a survey of the real-time version of the language cdl (compiler description language), especially its multitasking-concept. Above all the principles of the construction and the implementation on the computer system K 1600 are discussed. This cdl-version can be used in co-operation with the operating system MOOS 1600.

1. Introduction

The real-time version of cdl is a language for the programming of process-control problems.
Also in this field, the time is over for the use of problem-oriented high-level programming languages. All in the world are existing many kinds of real-time languages for process-control.
The realizing of this languages is done above all in two ways:

1) Into a problem-oriented language or into a subset of this one can insert supervisor calls of a giving real-time operating system. In this way it is not necessary to alter the compiler for this language.
   But the arising result is not homogenous. In the most cases, it is not possible, to check the use of the additional language constructs during the compile-time.

2) From a model of the control mechanism one can derive the multitasking operations. This operations are to completed with an algorithmic kernel of a giving language or with new constructs.
   In this way it is possible, to reach a homogenous result. It is necessary, to produce a new compiler, but this compiler can make a very extensive compile-time checking.

The second way is connected with more expense, but the result is favourable.

2. The Realization

The second method is the foundation for the development of a language, in that the efficiency of an assembling language is connected with the advantages of problem-oriented languages.
Solving the problem in this way, it is necessary to realize three steps:

1) The range of tasks of the real-time programming fixes a lot of demands. These demands result in a problem-oriented model.

2) The implementation of the language bases on a concret operating system (MOOS 1600). This system contains many possibilities for a multitasking. These possibilities result in a system-oriented model.

3) Now the demands of the problem-oriented model and the possibilities of the system-oriented model result in a compromise-model. This model determines the volume of the new real-time language.

To realize the first step, it was favourable, to inspect some existing languages with respect to their multitasking organizations. The result is a multitasking model, represented like a graph. The graph-nodes are representing the task states, the edges are showing the ways between the nodes with the necessary operations.
Fig. 1 showes the graph of the problem-oriented model and was build in connection to a lot of existing languages, for instance Process-FORTRAN, PEARL, ADA, PROGRESS.
The implementation should be performed on the computer system K 1600. The underlying operating system MOOS 1600 is denoted as a multiprogramming real-time system. The graph in fig. 2 showes the model of the task management of the system.
The compromise between the second and the first model results in the next graph (fig. 3).
Now, this task management must be embedded in an existing programming language, in continue to the second way. Such a language is the programming language cdl. Cdl takes place between an assembly program language and an problem-oriented programming language. Cdl is a so called semantic-opened language. That means, the user can produce his own semantic rules. In this way the language has been expanded by the real-time constructs. The result is real-time cdl.

A cut-out of the syntactical rules of real-time cdl illustrates the method:

```
TASKANWEISUNG   ::=  TASKOPERATOR   SYNCHRONISIERMITTEL

TASKOPERATOR    ::=   SCHEDULE,   ACTIVATE + INTERNER NAME
                     SUSPEND
                     CONTINUE + INTERNER NAME
                     DELAY PENDING + MAGNITUDE + UNIT
                     DELAY TILL + HOUR + MINUTE
                     TERMINATE + INTERNER NAME
                     PREVENT + INTERNER NAME

SCHEDULE        ::=  ZEITDAUERSCHEDULE   ZEITPUNKTSCHEDULE

SYNCHRONISIERMITTEL  ::= SET + EVENT  RESET + EVENT  WAIT + EVENT
                         SEND + BUFFER + LENGTH + INTERNER NAME
                         RECEIVE + BUFFER + LENGTH + INTERNER NAME
                         BEGIN REGION + INTERNER NAME
                         END REGION + INTERNER NAME
```

Additionally it is importend to say, that some syntactical checks are possible during the compile-time. That is, for instance, the correctly use of the critical region (the complete setting of the brackets BEGIN and END, the examination of possible deadlocks).
The connection to the peripheral process units is dependent on the concrete configuration. The realizing in real-time cdl is to do in the same way as shown for the real-time constructs. But this is the users matter and depending on the interface of the peripheral units.

Fig. 1 The problem-oriented model

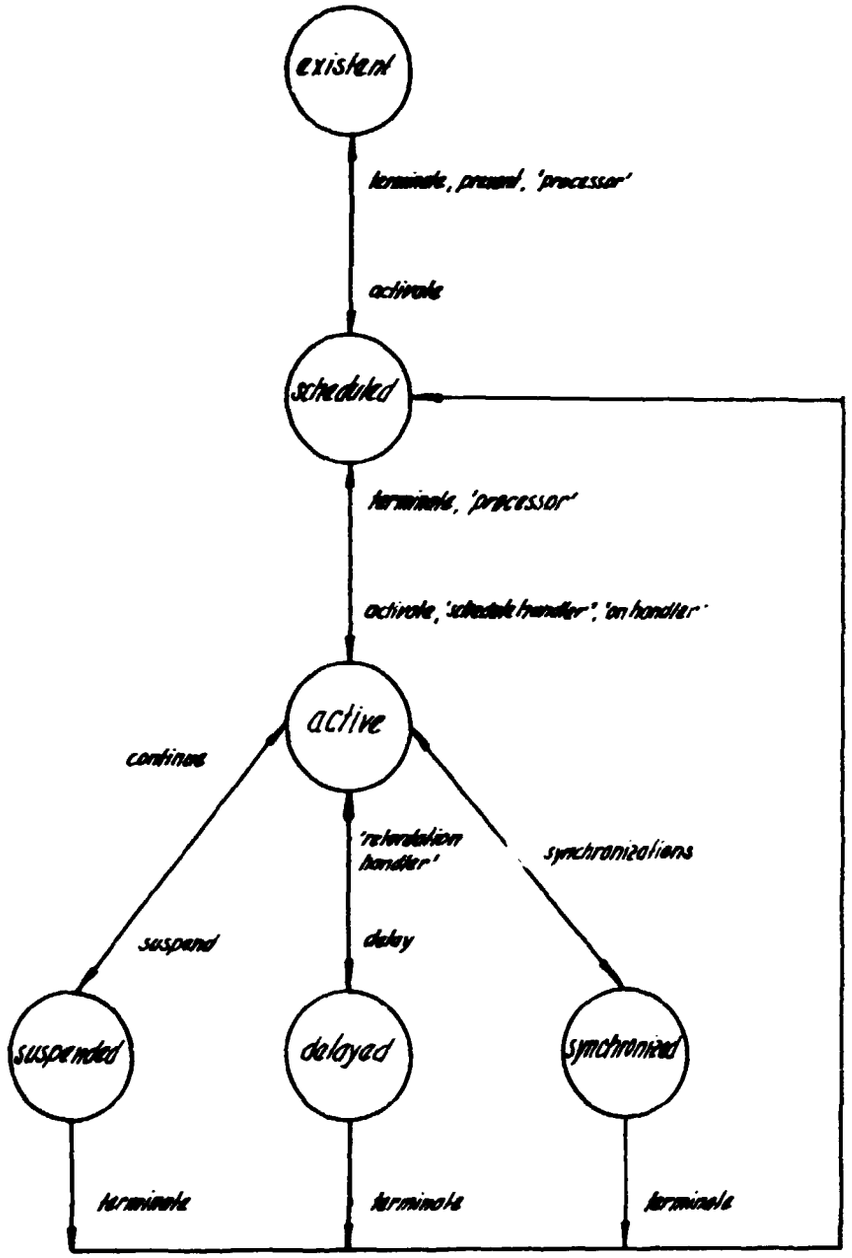

'...' represents routines of the underlying operating system

Fig. 2a The system-oriented model

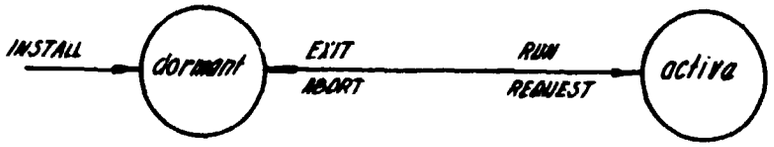

Fig. 2b Partial states of 'active'

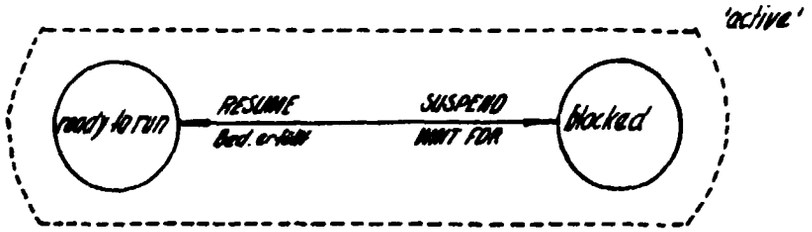

Fig. 3 The model of real-time cdl

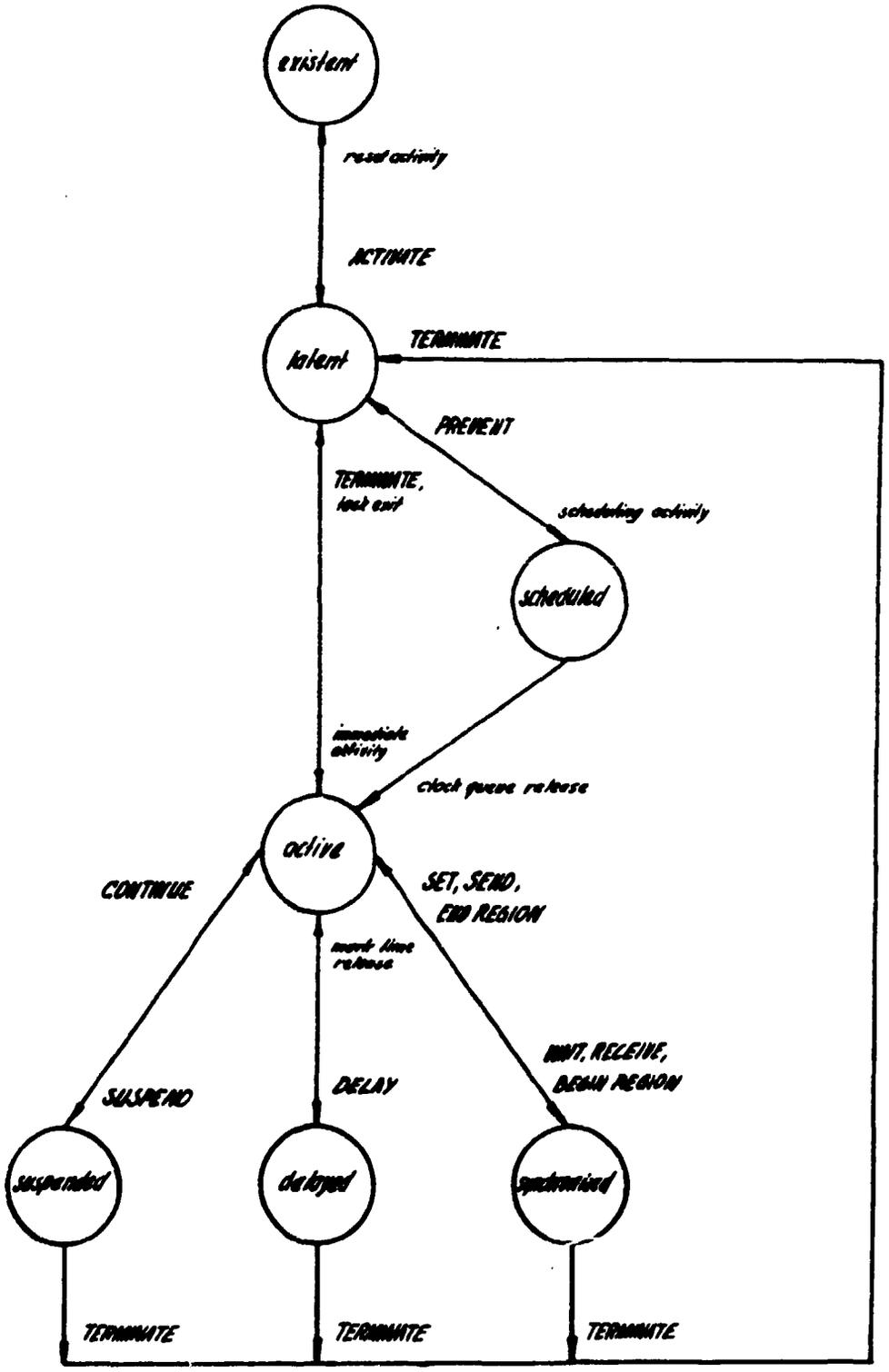

PROGRAMMING SYSTEMS FOR CAMAC CONTROL AT THE MPS 4944 MICROCOMPUTER

J, Pöthig
Technische Universität Dresden, Sektion Physik

The microprocessorsystem MPS 4944 /1/, developed at the Central Institute for Nuclear Research Rossendorf, is a modular system. Therefore several stages of configuration can exist.
For example, three types of processor-cards can be used. The in-built processors are intel I 8008, intel 8080 and Zilog Z-80 or the equivalent GDR-produced types.
Except the needed cards to complement the computer (peripheral drivers, memory cards, display of busline-signals) there can be installed several cards to couple the process to the computer (ADC, DAC, MUX, timer). But in nuclear physics measurements other modules (fast counters, amplifiers, fast analysers) are needed too. This wider spectrum of devices is given by CAMAC in the most cases. That's why this system was to be coupled to the microcomputer MPS 4944.

The basing device of this coupling is a special crate controller, the manual and external controllable crate controller type 3312 /2/. This crate controller unites the tasks of some several modules like manual controller, single-crate controller, dataway display, switch register and minimal controller for the Auxilliary Controller Bus.

The possibility of external control is of special interest. The coupling goes via a 16-bit-wide parallel input-output-register, supervised by handshake signals. Basing on this simple type of datatransfer the controller can be coupled not only to the MPS 4944 but also to other computers.
A coupling to computers of the PDP-11-family or SKR-System (system of small computers in the socialist countries) had been tested in October 1981 in the Joint Institute of Nuclear Research Dubna.

Now some words about software at the system MPS 4944-CAMAC. To support programming a special program has been developed, the so-called CAMAC-Monitor /3/. The most important task of this monitor is to serve the user writing programs in machine language. Therefore the monitor fulfils two tasks.

i) translation of the user's CAMAC-data needed for program (CAMAC-commands, write-data, starting points of LAM-handling)
ii) execution of the CAMAC-instruction, testing the answer of the modules and eventual start of a reacton-subroutine.

The first task is done before starting the user's program. To input data, a dialog between user and machine goes. The input data were translated by the machine into the needed form and stored into tables, supervised by pointers.

The second task is fulfilled while the user's program is running. This CAMAC-Monitor had given a great help when programs were written in macnine language. But using higher languages, already assembly language, some difficulties began to rise.
Therfore an enlargement of the basis-assembler has been developed /4/.
By the help of pseudo-mnemonics the user can work out his program in assembly language without knowledge of details of the coupling between microcomputer and crate controller. Also be need not translate data into the right form before using the assembler. To define date for the CAMAC-instructions several modes are possible: immediate, directly addressed or indirectly addressed.
Examples for programming the CAMAC-instrution N(10) A(0) F(16), 3 byte write data W(15), are given in tab. 1.

```
        CAMA   10,0,16,3,15            ; instruction and data immediate
        CAMA   (CINST),3,15            ; instruction directly addressed
        CAMA   (CINST),3,(CWDAT)       ; instruction and data directly addr.
        CAMA   ((CIPNT)),3,((CWPNT))   ; instruction and data indir. addr.
        .
        .
CINST:  CDEF   10,0,16                 ; declaration of the instruction
CWDAT:  DA     15                      ; declaration of the write data
        DB     0
CIPNT:  DA     CINST                   ; instruction-pointer
CWPNT:  DA     CWDAT                   ; write data-pointer
```

Table 1: Examples for CAMAC-programming

All these defining modes for commands and data are combinable, so that programming can be very effective and flexible.

Using this system, some programs were written. A program to control a neutron scattering experiment and data preprocessing is presented in another paper of this symposium /5/.

References:

/1/ -: MPS 4944, Firmenschrift ZfK Rossendorf, 1978
/2/ Pöthig,J.; Weidhase,F.: Proceedings Gaussig 1980, p. 179
/3/ Enghardt,W.: Proceedings Gaussig 1980,p. 189
/4/ Pöthig,J.: CAMAC-Applikation am Mikrorechner MPS 4944 mit dem Crate Controller 3312, TU-Information (in preparation)
/5/ Pöthig,J.: Microcomputer controlled set-up for the measurement of differential neutron scattering cross section Proceedings Rathen 1981

ИЗМЕРИТЕЛЬНО-ВЫЧИСЛИТЕЛЬНЫЙ КОМПЛЕКС ДЛЯ ЭКСПЕРИМЕНТОВ НА ЦИКЛОТРОНЕ

А.А.Виноградов, В.В.Парамонов, В.А.Соловьев, А.Г.Трунов, А.А.Цветков

Измерительно-вычислительный комплекс (ИВК) представляет собой автоматизированную систему для научных исследований, проводимых на циклотроне Института атомной энергии им.И.В.Курчатова. Его функциями является сбор и анализ экспериментальных данных в реальном масштабе времени, их обработка в процессе и по окончании измерений. ИВК создан на основе двух ЭВМ ЕС-1010 и аппаратуры в стандарте КАМАК.

ИВК для экспериментов на циклотроне был разработан в соответствии с требованиями запланированных исследований, а также с учётом его использования без существенных изменений при расширении диапазона задач.

Особое внимание было уделено повышению эффективности регистрации, оптимальному использованию оперативной памяти, созданию аппарата взаимодействия с ЭВМ, удобного для управления экспериментом, наглядного представления данных и совмещения ON - LINE и OFF - LINE обработки данных.

Упрощенная структурная схема комплекса представлена на рис.1.

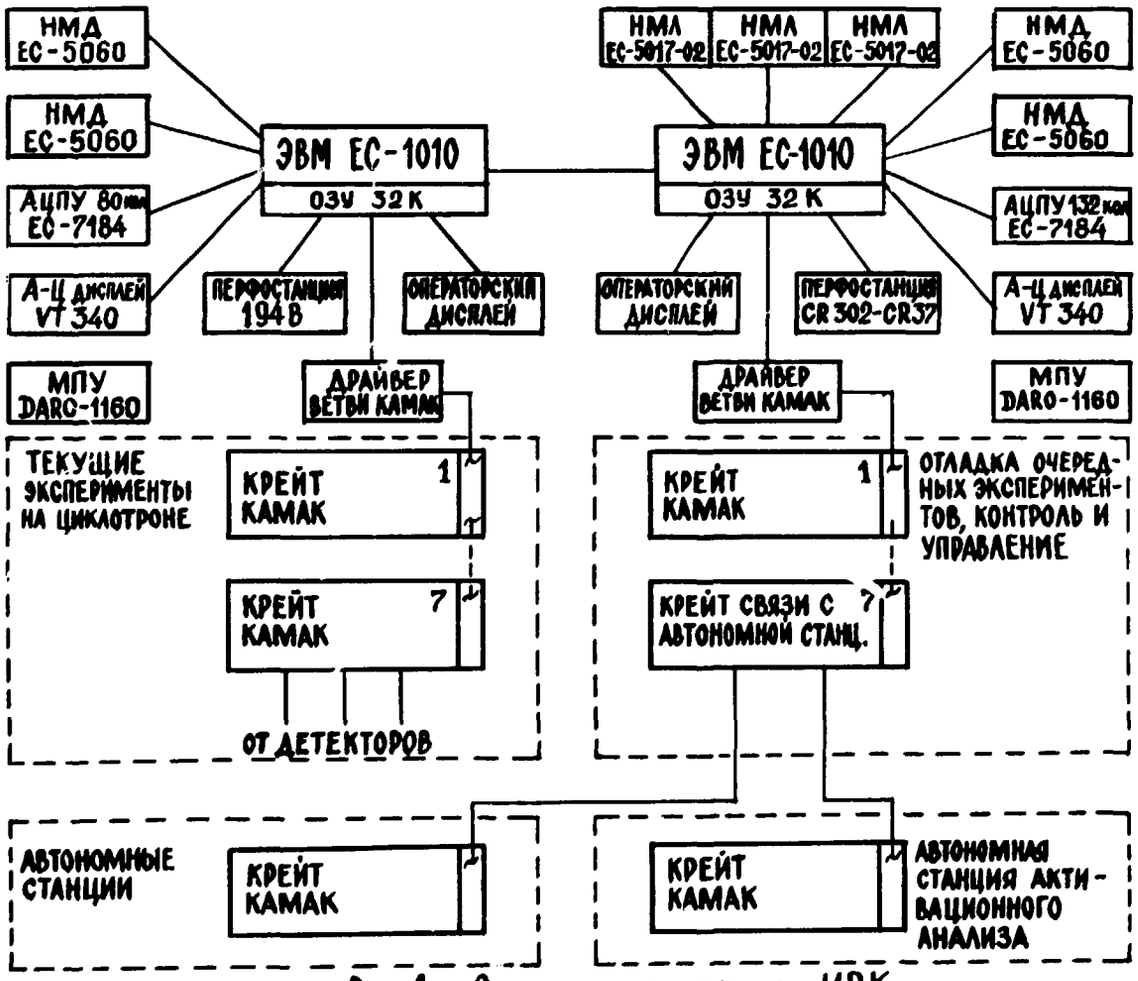

Рис.1. Структурная схема ИВК.

Его основу составляют две ЭВМ ЕС-1010 и аппаратура в стандарте КАМАК. Каждая из ЭВМ имеет оперативную память емкостью 64 К байт (предельную для ЭВМ этого типа), два накопителя на постоянном магнитном диске (НМД) по 800 К байт каждый, быструю печать (АЦПУ) барабанного типа и матричное печатающее устройство (МПУ), алфавитно-цифровые дисплеи, перфостанцию. Одна из ЭВМ укомплектована тремя накопителями на магнитной ленте (НМЛ). Для связи с экспериментальным оборудованием в состав ЭВМ входят устройства сопряжения многокрейтных систем КАМАК.

Организационно комплекс состоит из двух параллельно работающих измерительных систем с возможностью подключения к ним периферийных измерительных станций. Такая структура обеспечивает проведение текущих экспериментов на ускорителе и других источниках ионизирующих излучений, а также подготовку и отладку аппаратуры и программ очередных экспериментов.

Вторая ЭВМ используется также для обработки данных в режиме OFF – LINE

Между ЭВМ введена двухсторонняя связь по каналам прямого доступа к памяти, что дает возможность более эффективно использовать внешние устройства ЭВМ (в частности, НМЛ) и обеспечивает необходимое резервирование оборудования при долговременных экспериментах.

Для отображения одномерных или двумерных спектров, а также для их разметки применяется специально разработанный графический дисплей на базе цветного телеприемника

Идентификация заряженных частиц осуществляется цифровым способом путем измерения удельных потерь энергии (ΔE) на ионизацию в прострельном детекторе и энергии частицы (E) в детекторе полного поглощения.

Нейтроны и γ -кванты идентифицируются по форме импульсов сцинтилляционных счетчиков.

Управление экспериментом осуществляется с операторской клавиатуры. Основные команды управления являются односимвольными.

При достаточно развитой измерительной системе, включающей в себя большое число функциональных блоков КАМАК, обычно возникают определенные неудобства из-за необходимости многократного задания многих параметров аппаратуры КАМАК. Это особенно проявляется в начальной отладочной стадии эксперимента, когда необходимо часто менять условия и режимы измерений.

В нашей системе принят табличный способ задания параметров блоков КАМАК. В соответствии с полной схемой эксперимента описываются все блоки и заполняется таблица. В таблицу заносятся имена блоков, номера крейтов, адреса, субадреса, число уровней квантования, емкость счетных блоков и др.информация.

В операторских приказах для выполнения разных режимов измерений задаются только имена основных блоков. Остальные данные программы получают из таблиц.

Наш циклотрон практически во всех рабочих режимах ускорения работает в импульсном режиме. Частота следования импульсов изменяется от 50 до 300 Гц, скважность от 5 до 10.

Используя импульсный режим, с помощью вспомогательного контроллера и буферной памяти, расположенных в крейте КАМАК, удалось в значительной степени сократить мертвое время системы.

Контроллер запускается от начала импульса циклотрона и блокируется после его окончания. В течение импульсного пучка контроллер осуществляет сбор и накопление в буферной памяти данных, получаемых от преобразователей по их запросам.

После окончания фазы накопления или по заполнению буферной памяти, запускается программа приема данных в ЭВМ из буферной памяти и их обработки.

Таким образом, обработка данных на ЭВМ может осуществляться в течение всего эксперимента за исключением времени, необходимого для приема данных из буферной памяти.

На рис.2 приведены кривые эффективности регистрации без привязки к импульсам циклотрона и использования измерительного контроллера (кривые I,2,3), а также с использованием этого метода (кривые 4,5,6).

Кривые соответствуют трем вариантам анализа: - одномерному (I,4), двумерно-одномерному (2,5) и двумерно-двумерно-одномерному (3,6).

Как видно из рисунка, применение метода разделения функций накопления и обработки позволило увеличить эффективность регистрации приблизительно в 4 раза в пределах пропускной способности ЭВМ.

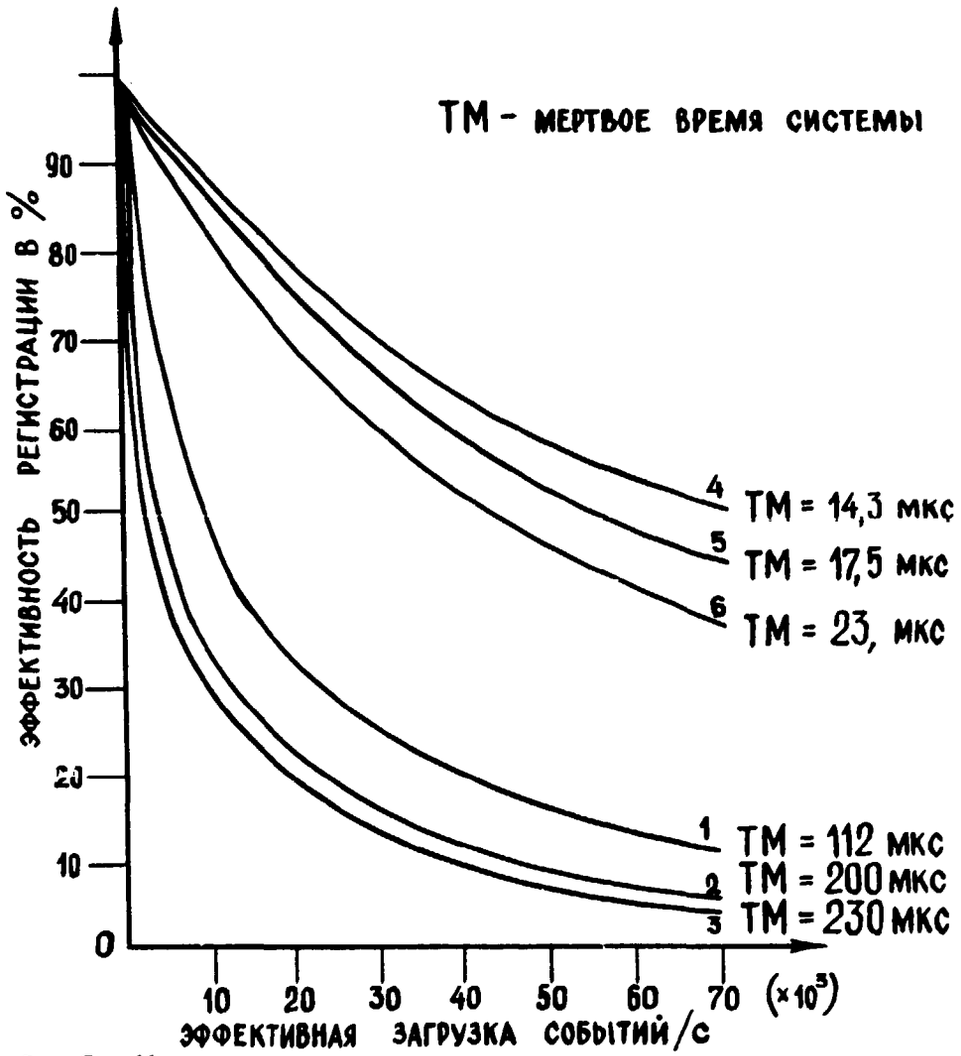

Рис.2. Кривые эффективности регистрации для различных режимов измерений.

ЛИТЕРАТУРА

I. Васильев А.И. и др. В сборнике трудов Второго всесоюзного совещания "Диалоговые вычислительные комплексы",Серпухов,I980,444.

ПРОГРАММНОЕ ОБЕСПЕЧЕНИЕ ИЗМЕРИТЕЛЬНО-ВЫЧИСЛИТЕЛЬНОГО КОМПЛЕКСА ДЛЯ ЭКСПЕРИМЕНТОВ НА ЦИКЛОТРОНЕ

А.А.Виноградов,В.В.Парамонов,В.А.Соловьев,А.Г.Трунов,А.А.Цветков

Программное обеспечение измерительно-вычислительного комплекса (ИВК) для экспериментов, проводимых на циклотроне Института атомной энергии им. И.В.Курчатова, состоит из специально разработанной единой системы программ "ASYS ", расчитанной на работу совместно с дисковой файловой операционной системой реального времени ЭВМ ЕС-1010. Программы "ASYS " обеспечивают подготовку, управление и проведение измерений, сохранение и воспроизведение данных, управление графическим дисплеем.

Программное обеспечение ИВК выполняет следующие функции:

-распределение оперативной памяти, необходимой для работы программ и накопления данных;

-исполнение команд, задаваемых с управляющей клавиатуры или от аппаратуры КАМАК;

-обслуживание запросов КАМАК;

-управление аппаратурой КАМАК;

-сбор, накопление и ON - LINE обработка экспериментальных данных;

-обеспечение оперативного представления данных на экранах дисплеев с целью контроля за ходом эксперимента;

-сервисное обслуживание;

-обеспечение взаимодействия всех программ.

Отличительные особенности:

1. Многоуровневая организация, позволяющая упростить и ускорить обработку запросов от аппаратуры КАМАК и управляющей клавиатуры. В качестве управляющей клавиатуры используется клавиатура операторского дисплея.

2. Динамическая загрузка общей высокоприоритетной зоны оперативной памяти последовательно выполняемыми программами, которые вызываются с клавиатуры операторского дисплея или по требованию программ, находящихся на разных уровнях, что позволяет многократно использовать эту зону и дает возможность освободить значительную часть оперативной памяти под буфер данных.

3. Использование общей зоны данных с целью упрощения обмена данными между программами, работающими на разных уровнях прерывания или в разное время.

4. Простое расширение возможностей системы как в части введения новых режимов измерений, так и дополнительного сервиса.

5. Все программы написаны на языке Ассемблера.

Схема распределения памяти и организации программного обеспечения ИВК показана на рис.1. Операционная система занимает 37% оперативной памяти, программы ASYS - 7%, под данные отводится 56% или около 18К при общем объёме 32К слов.

Программы системы ASYS располагаются в высокоприоритетной зоне памяти (FG) на пяти уровнях приоритета, не занятых операционной системой.

Программы ASYS

Программа RESDNT имеет шесть режимов работы (код режима работы хранится среди системных переменных в зоне ZC):

-режим загрузки программы и подсоединения их к уровню прерывания;

-режим приема ответов в диалоге оператора с системой ASYS ;

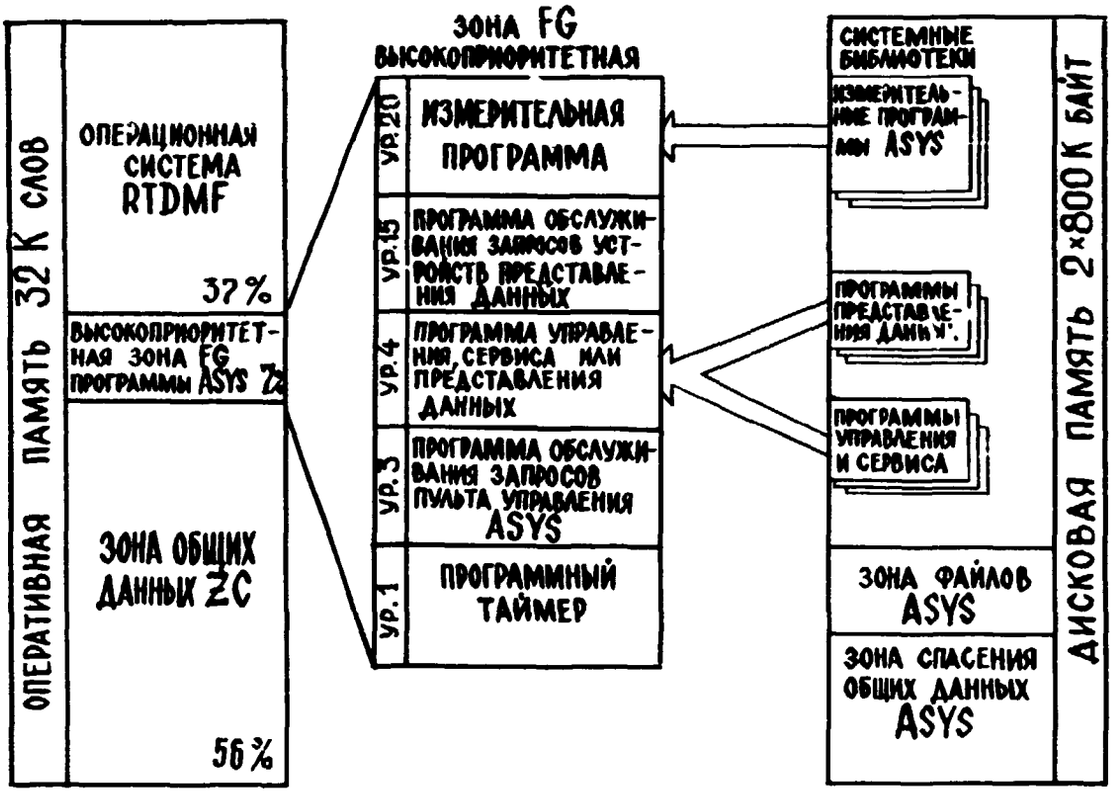

Рис. 1. Распределение памяти и организация программного обеспечения ИВК.

-режим внутрипрограммных команд;

-три режима приема команд управления ASYS

Команды управления системой разделены на три функциональных группы:

1. Команды управления экспериментом.
2. Команды управления графическим дисплеем.
3. Команды управления файлами.

Группа команд управления измерениями по своему содержанию может быть условно разделена на подгруппы:

команды подготовки к измерениям,

команды непосредственного управления измерениями,

команды, вызывающие представления данных,

команды сохранения и воспроизведения данных.

Программы непосредственного управления измерениями дают возможность подготовить блоки КАМАК к приему данных, инициировать их работу, приостанавливать и запускать вновь измерения, завершать их и, при необходимости, зануля́ть данные в желаемой области.

Программы представления данных позволяют оператору выводить результаты измерений на дисплеи и АЦПУ и представлять их как в цифровом, так и в графическом (одномерные и двумерные графики) видах.

Программы сохранения и воспроизведения данных обеспечивают запись на диск результатов измерений вместе со словесным комментарием ("паспортом") в виде файла, а также их чтение и воспроизведение.

Программы управления графическим дисплеем позволяют изменять масштаб и начальный канал наблюдения, число наблюдаемых каналов и предоставляют другие услуги.

Программы управления файлами дают возможность просматривать списки файлов на диске и магнитной ленте и переписывать файлы с диска на ленту и обратно.

Измерительные программы работают на 20-м уровне приоритета. Они обеспечивают сбор, сортировку и накопление данных, получаемых от функциональных измерительных блоков типа аналого-цифровых преобразователей (АЦП) или буферной памяти КАМАК.

Измерительные программы предоставляют возможность пользователю проводить одномерные, двумерные, многомерные и комбинированные измерения с восьмью независимыми или коррелированными измерительными каналами.

MICROELECTRONICS AND ITS EFFECT ON NUCLEAR ELECTRONICS DEVELOPMENT

W. Meiling
Technical University Dresden, Department of Physics, Dresden, GDR

Introduction

Microelectronics technology allows production of complete circuits like logical gates, counters, memories, amplifiers, or analog-to digital converters as monolithic integrated circuits or as hybrid circuits. In the latter case, several chips are assembled on a substrate which contains e.g. thick-film circuitry to realize the conduction paths. The significant technological progress in large-scale integration obvious in last years exhibits new possibilities to design more powerful measuring devices which include digital data acquisition and data processing. The application of microprocessors and microcomputers offered higher precision of measurements, automation and control of the measuring system and, last not least, real-time data processing at such a level, which could not obtained without these LSI circuits.

Due to the microelectronics remarkable improvements of the parameters of nuclear radiation detectors and nuclear electronics instrumentation would be expected. In the following review this expectation as well as some selected examples of microelectronics application are discussed restricting in this report to low- and medium-energy nuclear physics instrumentation and neglecting the fascinating control and data acquisition systems in high-energy physics experiments.

Some tendencies in nuclear electronics

The parameters of nuclear electronics circuits are essentially influenced by the property of nuclear particle detectors and radiation sources like accelerators and neutron sources. They also depend on the level of electronic components /1, 2/.

During last 50 years the resolving time of pulse counters decreased from some hundreds of milliseconds given by mechanical counters to better than 10 or 20 ns, if up-to-date MSI TTL or ECL logical circuits are applied (fig. 1), e.g. CAMAC fast scalers with 150 MHz scaling frequency are available in most nuclear physics laboratories. The time resolution dependency on time period shows asymptotic tendency, the limit value of which is determined by the counting resolution of fast scintillation and semiconductor detectors. Concluding from fig. 1 remarkable improvement of counter time resolution by use of new microelectronic components may be stimulated provided that better particle detectors with smaller resolving time are introduced in nuclear physics research. At present there is no notice for faster radiation detectors in low- and medium-energy nuclear physics.

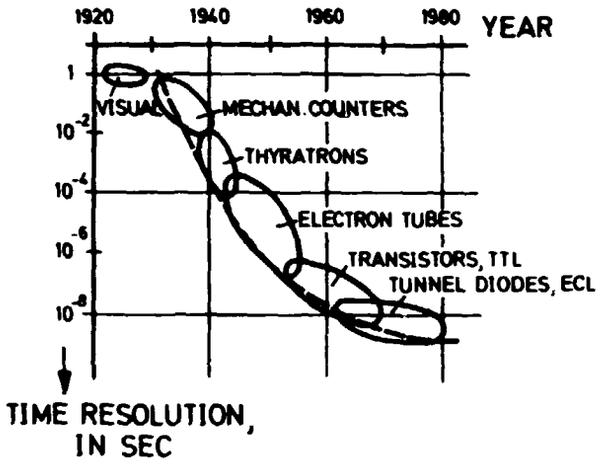

Fig. 1:
Resolving time of pulse counters vs. time period

The resolving time of coincidence arrangements exhibits an asymptotic tendency which is characterized by two separate branches (fig. 2).

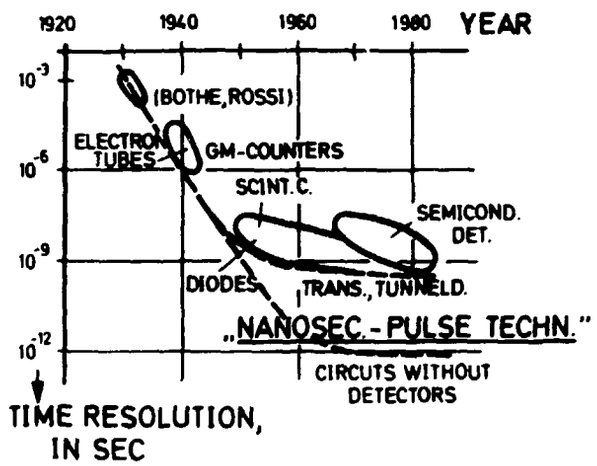

Fig. 2:
Resolving time of coincidence arrangements vs. time period

Time resolution is defined by half-width of coincidence curve measured with a coincidence circuit or with a time-to-amplitude converter. In last decades due to the essential improvement of scintillators and fast photomultipliers and, after 1965, due to the development of high resolution semiconductor detectors and sophistical timing methods, time resolution of coincidence arrangements attained the range of 0.1 to 10 ns, depending on parameters like energy value, energy range, detector size, and others. On the other hand, the electronic resolution of coincidence arrangements, defined by the half-width of coincidence curve measured with generator pulses which have no risetime and amplitude jitter, is much smaller. There is no serious difficulty to discriminate generator pulses with transit time differences of smaller than 1 ps. Summarizing all the contributions to coincidence resolution time, the essential improvement of radiation detector resolution is the main point to open

the subnanosecond and picosecond range in nuclear spectroscopy and other investigations. Further development of coincidence circuits and time analyzers, e.g. by use of integrated circuits, is able to improve stability, linearity, timing and data processing capabilities, but cannot reduce the resolution time by one order of magnitude or more if actual radiation detectors are used.

The maximum event rate in high-resolution nuclear spectroscopy measurements (fig. 3) is of great interest when measurements with short-living nuclides or during short beam periods at particle accelerators are carried out.

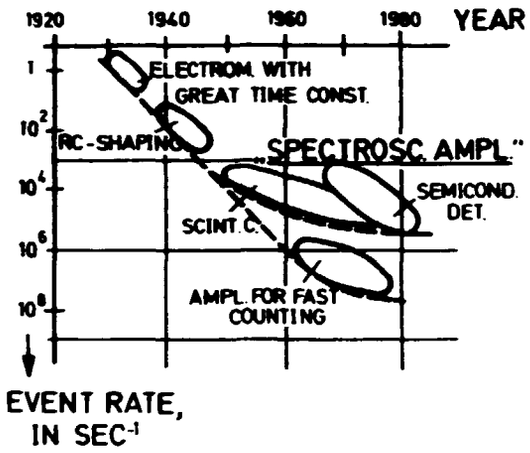

Fig. 3:
Maximum event rate in spectroscopic amplifiers vs. time period

In high-resolution spectroscopic amplifiers the energy resolution must not be reduced with increasing event rate. The pulse shaping network is adapted to the best possible signal-to-noise ratio. Furthermore, the amplifier must be insensitive against background pulses which can be higher than the measured signals and which disturb low-energy spectroscopy. In addition to this, important parameters like gain and zero level stability, linearity, pile-up rejection, and selection of shaping time constants should be mentioned. In last decade high-resolution Ge(Li) and Si(Li) detectors stimulated the development of high-performance nuclear spectroscopic amplifiers which can process data rate up to 10^5 s^{-1} without considerable reduction of energy resolution. Of course, realization of these expensive amplifiers was supported by application of integrated circuits. On the other hand, simple amplifiers to interface detectors and data acquisition devices are advantageously based on commercially produced operational amplifiers and other analogue integrated circuits. Similar to figs. 1 and 2 an essential improvement of maximum event rate is necessary only if detectors with higher energy resolution and with optimum pulse lengths, which are considerably smaller than 1 μs, are available. At present, such essential improvements of detector parameters are out of sight.

The number of channels in one- and multiparameter data acquisition shows no asymptotic tendency (fig. 4) in contrary to figs. 1 to 3. Due to the inherent energy resolution of scintillation and semiconductor detectors, accumulation

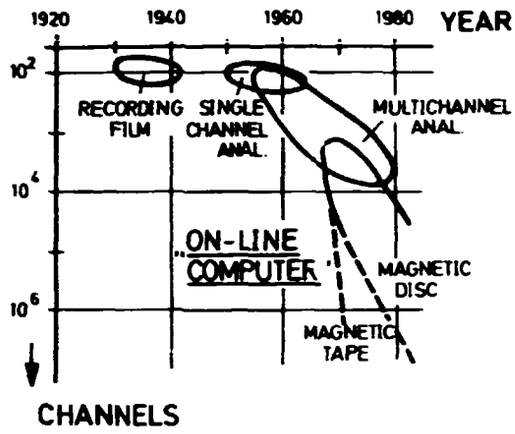

Fig. 4:
Available channels in data acquisition vs. time period

of an energy spectrum requires multichannel analyzers with 256 or up to 4000 channels. Such analyzers realized as stand-alone devices or based on small computers represent part of standard nuclear laboratory equipment. But most nuclear physics experiments require simultanous time-correlated data acquisition, that means recording of pulses emitted by more than one detector. In such multiparameter measurements the number of necessary channels is given by the product of channel numbers of all the separate parameters. By this way, coincidence measurements of two semiconductor detectors both with resolution of 1000 channels and with a third parameter coded with 256 channels, e.g. representing the time difference of the coincident events, would demand more than 10^8 channels. This huge channel number cannot be realized as random access three-dimensional memory matrix, and if this would be possible data processing of such great data fields would release new difficulties. To solve all the serious problems mentioned above application of mini- and micro-computers equipped with powerful peripheral memories and input/output devices is recommended.

Essentially three methods are used:

- Successive measurement of preselected parts of the whole multiparameter spectrum allowing data accumulation in a random access memory, and in more powerful systems, in combination with a magnetic disk. By this way, a 448 000 channel analyzer was successfully proved / 3 /.
- Event-by-event storage using magnetic tape. This allows storage of all events, but requires time-consuming data accumulation after finishing the measurement.
- To reduce channel number, data processing of each arriving event before storing by utilization of mathematical relationship of parameters, e.g. for each event calculation of mass number from measured energy and time-of-flight values and accumulation of spectra in dependence on mass number.

With increasing power of mini- and micro-computers and with their extended availability in nuclear physics laboratories data acquisition is more and more improved. Therefore, at present no asymptotic behaviour in fig. 4 can

be noticed.

Summarizing the diagrams figs. 1 to 4 the most important influence of microelectronics on nuclear physics instrumentation should be directed to data acquisition, data processing and application of programmed algorithms to control the experimental arrangement and to obtain more precise measuring results. Nevertheless, microelectronic components should also be able to improve some parameters of counters, time analyzers, amplifiers or other circuits, if new detectors with better resolution are available in future.

Computer-aided measuring systems

In the sixties, "classical" minicomputers like PDP-8 opened the field of computer-aided instrumentation. This required the development of suitable interface units and stimulated the definition of standardized instrumentation systems. By this way, in 1969 the ESONE committee defined the modular instrumentation system CAMAC, which found application in most nuclear physics laboratories round over the world. CAMAC is also used in other fields of experimental research and partially in industrial control. The structure of CAMAC modules as well as the operation of the various CAMAC dataways are well-known, e. g. /4/.

CAMAC offers excellent supposition to control data transfer and data processing in experimental arrangements by computers of different configuration:

- External mini- or micro-computer which is coupled to the CAMAC crate using crate controller.
- Intelligent crate controller with built-in microcomputer to controll all the modules of the crate.
- Use of several microcomputer-equipped controllers in a crate coupled by means of the auxiliary controller bus, and application of modules which contain microcomputers programmed to control special peripheral devices.

The last mentioned configuration is referred to the distributed data processing in measuring systems. Applying powerful microelectronic components remarkable progress in distributed data processing should be expected, that means increasing processing capability for experimental data, higher reliability, higher precision of measured results, and better efficiency of software development and modification combined with better clearness of the programming system.

Among other application, distributed data processing is able to support multiparameter measurements with high channel numbers and with high level of real-time data processing. The modular experiment multiparameter pulse height instrumentation system MEMPHIS (fig. 5) makes use of a modified CAMAC dataway, the so-called COMPEX mode /5/. Up to 16 ADC's can be applied, each of them is connected with a 8 K x 24 bit RAM and with different analog and digital processing modules. The word length of the multiparameter events which are

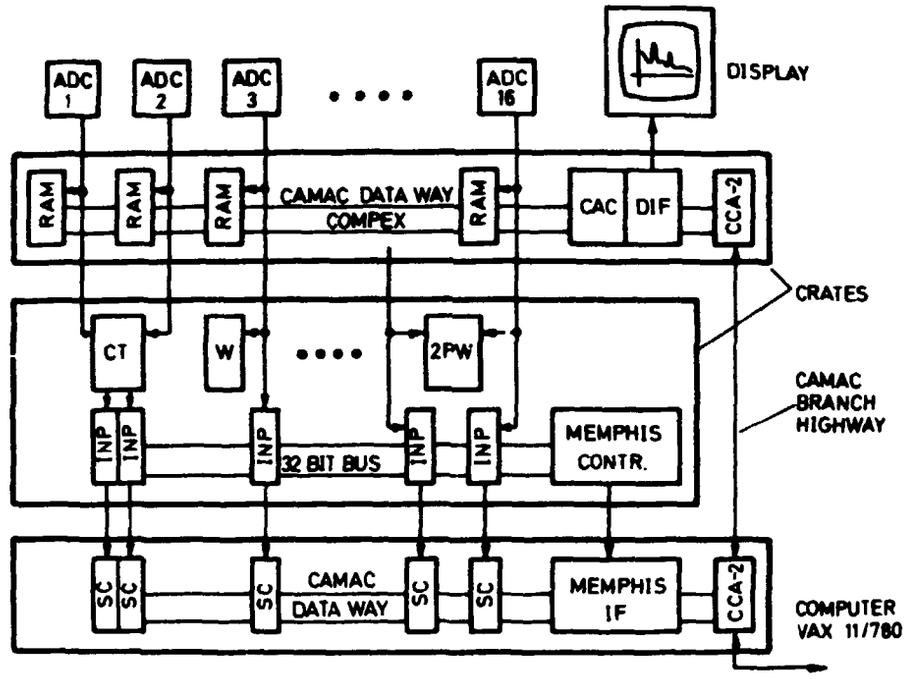

Fig. 5: Structure of modular experiment multiparameter pulse height instrumentation system MEMPHIS,
CAC COMPEX auxiliary controller, DIF display interface,
CT coordinate transformation unit, W 1-parameter window unit, 2 PW 2-parameter window unit, INP input unit,
SC scaler

transferred to the minicomputer is up to 128 bit. In fig. 6 a million channel analyzer "MADAME" is represented /6/. In comparison with fig. 5 this system is characterized by use of several microprocessors which operate on data of the connected AD-converters. The parallel data processing allows event rates of up to 5.10^4 s^{-1} and exhibits more than 10^6 words of memory.

Contrary to the high-power systems in figs. 5 and 6 more simple data acquisition arrangement can be realized by use of CAMAC modules like AD-converter, memory modules and controller with built-in microcomputer, e. g. system AMCA-80 /7/. The multichannel spectroscopy system 1450 /8/ includes microcomputer to control alphanumeric display, input and output functions (real-time background subtraction, plotting et al.) and special processing (data smoothing, integration of peak areas, and others).

One of the most important demands in nuclear reactor instrumentation is the highest possible level of reliability. This is referred to the long-term operation of detectors and electronic processing units as well as to the interpretation of interrupt signals which are caused by dangerous states or

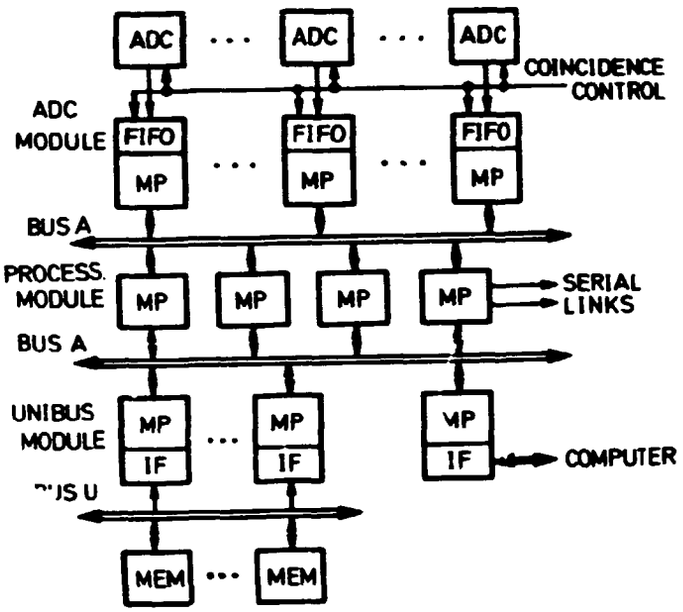

Fig. 6:
Structure of million channel multiparameter analyzer MADAME, FIFO first-in-first-out memory, MP microprocessor, IF interface, MEM memory

by incorrect operation of instruments. Using redundant instrumentation, e. g. two-of-three type redundancy check, and by use of correlation between signal sources a better decision between really dangerous states and random defects of measuring techniques can be obtained. In fig. 7 the structure of such a

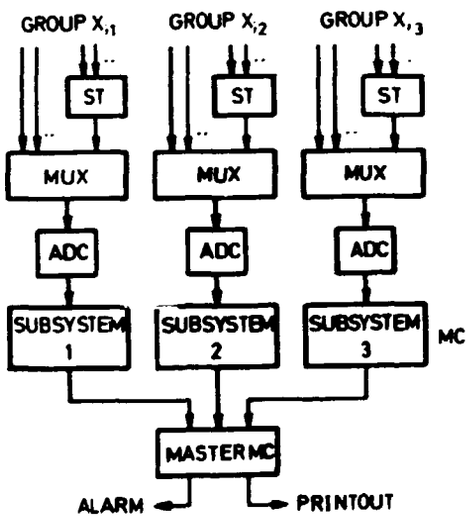

Fig. 7:
Structure of microprocessor-based decision aid for resolving conflicting nuclear reactor instrumentation, ST sensor test, MUX analogue multiplexer, MC microcomputer

microcomputer-based, on-line decision aid in nuclear reactor instrumentation is shown /9/. In this or in similar cases application of microcomputers gives higher reliability and security provided that the system-dependent correlations of sensor signals, basing on mathematical models, are taken into

consideration. Microcomputers are able to do the necessary on-line calculations.

Special applications of microelectronic components

Improvements of details of nuclear electronics devices are possible by use of microelectronic components. But the comparatively low number of such devices which are applied in nuclear physics research do not justify the production of customer-designed integrated circuits, with exception of special amplifier and shaping circuits for multiwire proportional chambers in high-energy physics. On the other hand, by application of bare integrated chips mounted immediately on the backside of the sensitive detector volume to do pulse amplification and pulse shaping, compact radiation detectors with high output signals can be produced (fig. 8).

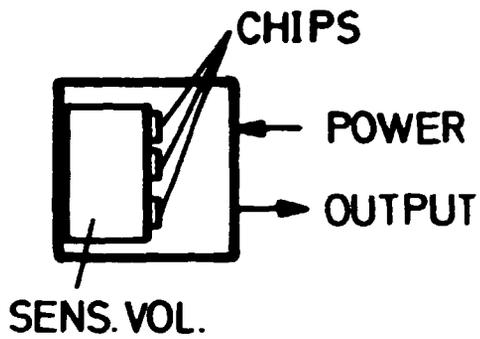

Fig. 8:
Principle of sensor equipped with microelectronic chips to amplify and adapt detector signals

Another example of application of amplifier chips is represented in fig. 9 /10/. This circuit uses chips assembled as hybrid ciruit. In a special

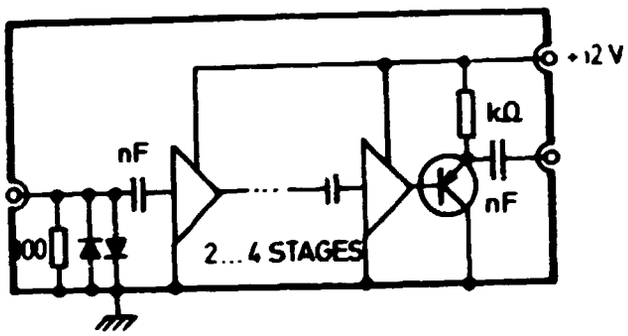

Fig. 9:
Fast timing amplifier basing on hybrid technology

version the gain is 2 to 15 with risetime ≤ 200 ps offering e. g. the application in subnanosecond lifetime measurements with laser excitation.

The use of data processing elements in portable devices, e. g. dosimeters or analyzers, should give better performance. In fig. 10 the principle of a radiation detector equipped with processor, display and keyboard is represented. In this a single-chip microcomputer, e. g. Zilog Z8, has several

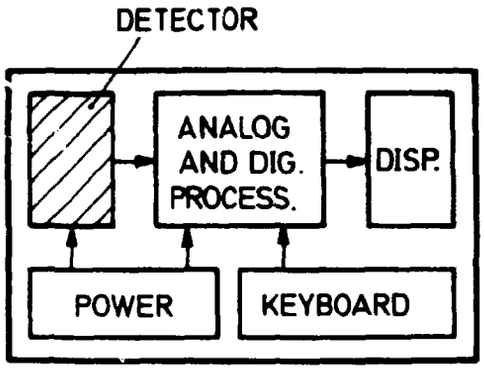

Fig. 10:
Principle scheme of a microcomputer-equipped portable radiation detector

advantages: internal program and data memory, more than 20 programmable input/output lines and an internal counter, which can accumulate the number of detector signals. Further, with suitable software numerical processing of recorded data rate is possible. In a portable gold analyzer (fig. 11) the internal electronic components calculate contents of gold in the mine wall and indicate their value on the display /11/.

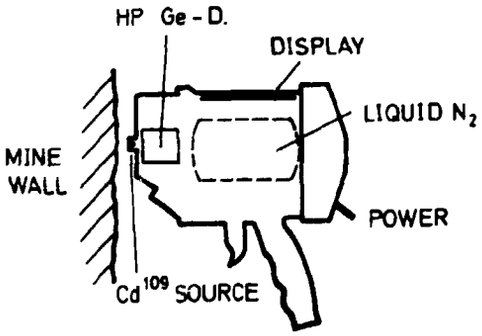

Fig. 11:
Portable gold analyzer, with high-purity Ge detector

To solve extensive arithmetical operations on a microcomputer, e.g. decomposition of spectra, floating point arithmetic programs, mathematical functions and other programs are required. Therefore, at first sight coupling of microprocessor and calculator chip seems to be of some advantage. According to fig. 12 an interface performs the input/output requirements of the calculator chip and contains buffers for input and output data /12/. From experience it can be concluded that this method gives a higher calculation rate and lower microcomputer program memory provided that the calculator chip is able to do more complicate calculations, e. g. exponential and trigonometric functions, or that the numerical calculator chip is especially adapted to the micro-

computer data bus. By this way, the arithmetic processor Am9511A is equipped with 8 bit parallel data input/output lines and with a signal "end of operation" which announces the end of calculation /13/.

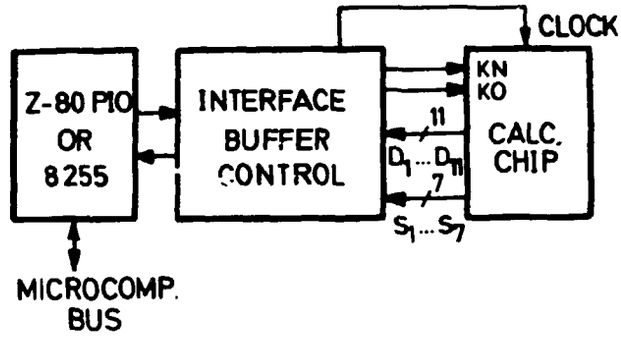

Fig. 12:
Principle of interface to connect microprocessor and calculator chip, $D_1 \ldots D_{11}$ digit input/output, $S_1 \ldots S_7$ coded 7-segment output, KN, KO input control

In nuclear physics instrumentation, analogue and digital processing of detector signals is of essential importance. Furthermore, other parameters like magnetic lens current, vacuum, beam current or deflection voltage are given contrary to the detector signals by slowly changing currents and voltages. This situation can be compared to supervision of producing devices where temperature, pressure or mass flow must be measured and converted into digital values. Automation of nuclear physics experiments, therefore, requires control of the whole arrangement in closed-loop mode. The single-chip microcomputer 8022 /14/ includes an 8 bit analog-digital converter (fig. 13) and exhibits interesting possibilities to do supervision and control,

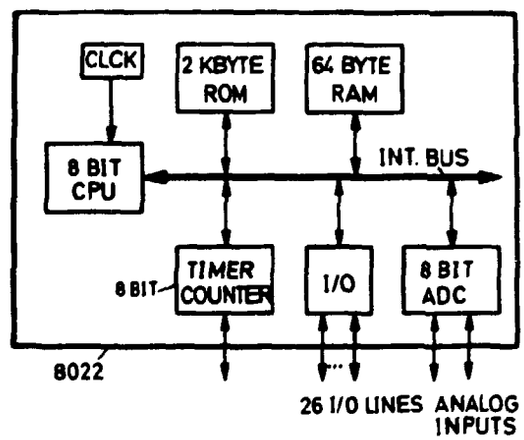

Fig. 13:
Structure of the 8 bit single-chip microcomputer

when using the analog inputs of the 8022 computer. Unfortunately, the memory is mask-programmed, therefore, the application is restricted on large numbers of devices or on standard problems.

A new tendency in data processing circuits is shown by the signal processor 2920 /14/. This circuit is designed to take samples of analogue signal with maximum sample rate of 13 kHz and to process numerically these samples without additional circuits (fig. 14).

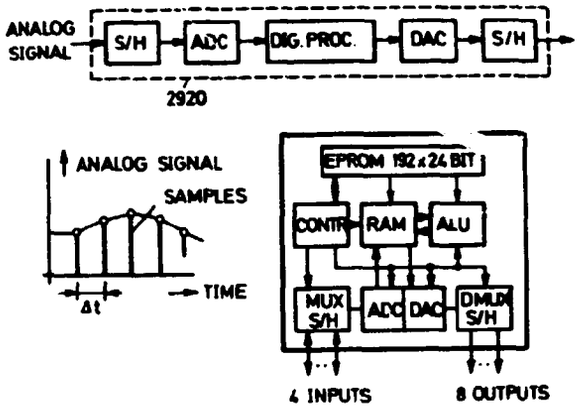

Fig. 14:
Sampling of analog signals and data processing using the signal processor 2920,
S/H sample-and-hold unit,
ALU arithmetic-logic unit,
DMUX demultiplexer

At present there are not known any appliancies of this 2920 processor in nuclear electronics instrumentation, but this processor should allow simple correlation analysis of special radiation detector signals.

Conclusions

The application of modern microelectronic components is able to expand the parameter values of nuclear electronics instruments, especially the number of channels in multichannel analyzers, data processing using the principle of distributed data processing, and data processing in portable devices. In these fields great progress can be expected in next years. The instrumentation system CAMAC exhibits good posibilities of introducing microcomputers to control devices and to process data.

Typical nuclear electronics de ices like pulse counters, amplifiers, coincidence units or time analyzers are modified in some details of circuitry, but not in essential properties when e. g. fast ECL gates are used. Further it must be taken into consideration that microcomputer techniques has developed special components and methods which obtain increasing importance in the broad field of nuclear electronics. This is referred to memory chips in analyzers and buffer memories, to microprocessors and programmable input/output ports and to the change of long-distance parallel data transfer to serial data transfer basing on UART and USART chips. This change is supported by expanding local data processing which reduces data rate transferred from data source to the processing computer.

References

/1/ W. Meiling: Kernphysikalische Elektronik, WTB-Reihe Band 160, Akademie-Verlag Berlin, 1975

/2/ W. Meiling, H.-G. Ortlepp, X. Internat. Symp. Nucl. Electr., Dresden 1980, Report ZfK Rossendorf, ZfK-433, 1981, Vol. I, 129

/3/ J.W.D. Sinclair, J.W. Smith et al., Nucl. Instr. and Meth. 111 (1973) 61

/4/ G. Naumann, W. Meiling, A. Stscherbina: Standard-Interfaces der Meßtechnik, Verlag Technik Berlin, 1980, Moskau 1981

/5/ H. Stoff, G. Brandenburg et al.: IEEE Transact. Nucl. Sci. NS-28 (1981) no.1, 400

/6 B. Stanzel, D. Kunz et al.: IEEE Transact. Nucl. Sci. NS-28 (1981) no.5, 3892

/7/ AMCA-80, Informationen ZfK Rossendorf

/8/ Multichannel spectroscopy system 1450, EG & G Princeton Applied Res. Corp., 1981

/9/ H.P. Alesso: IEEE Transact. Nucl. Sci. NS-28 (1981) no. 5, 3919

/10/ VT 110A fast timing amplifier, EG & G Instruments, 1981

/11/ Portable gold analyzer, EG & G Ortec News, 1980

/12/ S. Oswald, W. Meiling, Wiss. Z. TU Dresden 30 (1981) no. 1, 27

/13/ Arithmetic processor Am9511A, Advanced Micro Devices, 1980

/14/ Signal Processor 2920, Single component 8-bit microprocessor with on-chip A/D converter, Intel Corp., 1980

AUTOMATION OF EXPERIMENTS BY MEANS OF CAMAC EQUIPMENT IN THE FIELD OF NUCLEAR SPECTROSCOPY

W.D. Fromm
Central Institute for Nuclear Research, Rossendorf, GDR

Abstract

Different methods for automatic control of the experimental apparatus by means of CAMAC equipment are presented. Stabilization procedures are essential for long exposure times where weak effects are searched which may be blurred by electronic drift or systematic change of the experimental conditions. Examples for the stabilization of energy spectra, RF-γ time distributions and the plunger-target distance are given. The comparison of related spectra recorded in angular distribution, polarization or Dopplershift attenuation measurements can be relieved putting the detector on a stepmotor controlled turn-table thus equalizing the degrading effects with repetitive short expositions for all spectra.

Introduction

I would like to present 4 selected experimental arrangements which are in regular use in nuclear spectroscopy investigations at the Rossendorf cyclotron. The experimental information which has to be extracted from γ-ray measurements is contained in transition energies and intensities as well as in the time of the registration moment. There is a lot of different experimental methods which have to be applied in order to determine the level ordering and their characteristics (spin, parity, transition probability etc.). In this talk we cover from the variety of experimental arrangements and dedicated on-line programs only those, where the stability and reproducibility of the spectra is guaranteed applying CAMAC-modules for steering and control of the in-beam experiment. As a matter of fact the most important physical information is often connected with weak transitions near the detection limit. Therefore, beneath excellent energy- and time resolution long exposure times are needed to reach sufficient statistics. Only a very stable apparatus will not degrade the quality of the spectra and allow the experimentalist to extract all of the physical information which may be contained in the measurement.
The CAMAC system in use for this purpose is based on a parallel branch driven by a ROBOTRON KRS 4201 minicomputer (16 bit, 32K core memory). The programs are executed under control of a fast real-time system which serves only the standard periphery [1]. The CAMAC apparatus is controlled by means of a common handler which resides in memory. The application programs are written in assembler language. Information on the different programs for data registration and evaluation can be found in [2].

Energy Stabilization

There are different methods in use to stabilize the energetic response of a spectrometer. Some Multichannel Analyzers include a precision pulse generator which pulses are fed through the preamplifier. A routing signal prevents the

registration of the stabilizing pulse within the spectrum but triggers an electronic circuit which changes the conversion ratio in dependency of the recorded pulse height. The problem here lies in the limited stability of the pulser itself which furthermore is difficult to measure because of the unknown stability of the analyzer itself. Another drawback of the pulser method is that only changes of the amplification can be corrected.
The use of internal reference peaks of natural origin and some analyzing program is another possibility for the stabilization of the apparatus. Since the energetic definition of a γ-ray is orders of magnitude better than the experimental resolution his stability can be thought as unlimited. Fig. 1 shows a schematic example of the internal stabilization method.

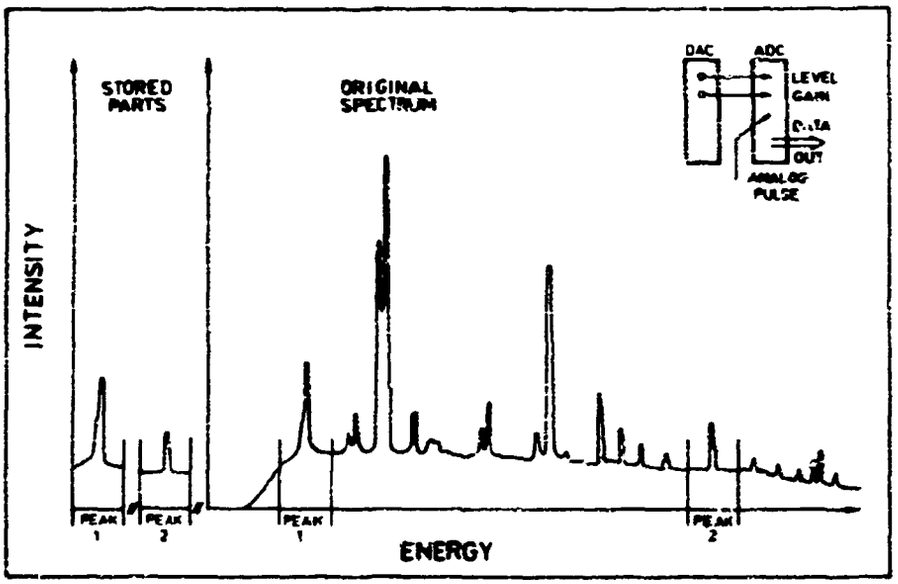

Fig. 1
Schematic diagram of energy stabilization

Two peaks from the spectrum are selected, one in the low-energy portion and the other at the high-energy end of the spectrum. The proper choice of two well-defined peaks is the task of the experimenting physicist. The spectrum is continuously updated with pulse heights from the Analog-to-Digital Converter (ADC) using the DMA-channel of the computer. At the start of the stabilization procedure the exact positions of the selected reference peaks P1 and P2 are determined from the center of gravity of the channels around the peak maximum with the background subtracted. Two arrays are filled with the channel content of the two regions of interest. The stabilization program is restarted by the real-time system after a choosen time (typical couples of minutes) and determines the new positions of the two peaks P1' and P2' from the differential spectra constructed from the actual channel contents minus the stored ones. Afterwards the stored arrays are updated with the actual contents.
A peak drift ΔP can be caused by a change of the system gain ΔV or/and a drift of the bias level ΔS

$$\Delta P1 = P1' - P1 = \Delta S + \Delta V \cdot P1 \ .$$

It is easily seen that in the case of an identical drift of the two peaks only

the bias level has changed. In the case of an energy-proportional drift only the amplification gain in the spectroscopic tract (preamplifier, amplifier, ADC) is unstable. With the two values for ΔP the drift in terms of gain and bias change can be computed:

$$\Delta V = \frac{\Delta P2 - \Delta P1}{P2 - P1} \qquad \Delta S = \frac{\Delta P1 \cdot P2 - P1 \cdot \Delta P2}{P2 - P1}$$

The drift can be compensated if an ADC is used which allows control of conversion gain and bias level by means of an external applied reference voltage. Table 1 shows the influence of correction voltages for the two ADC types used for spectra stabilization in our laboratory.

ADC-type		Producer	Voltage	Gain change	Level change
KA-206	[3]	JINR Dubna	5 V	1.7 %	1.8 %
CAM4.04-1	[4]	KFKI Budapest	5 V	1.5 %	direct

Table 1 ADC-types used for spectra stabilization

Time Stabilization

The beam of a classical cyclotron is bunched as a consequence of the acceleration process. This fact allows for an easy measurement of time distributions in the time interval between the particle bunches which in the case of the Rossendorf cyclotron is 90 ns long. The Time-to-Amplitude-Converter (TAC) is started by a signal derived from the RF-voltage of the accelerator and stopped by a γ-ray registered by the Ge-detector. Fig. 2 shows an example of such a time distribution.

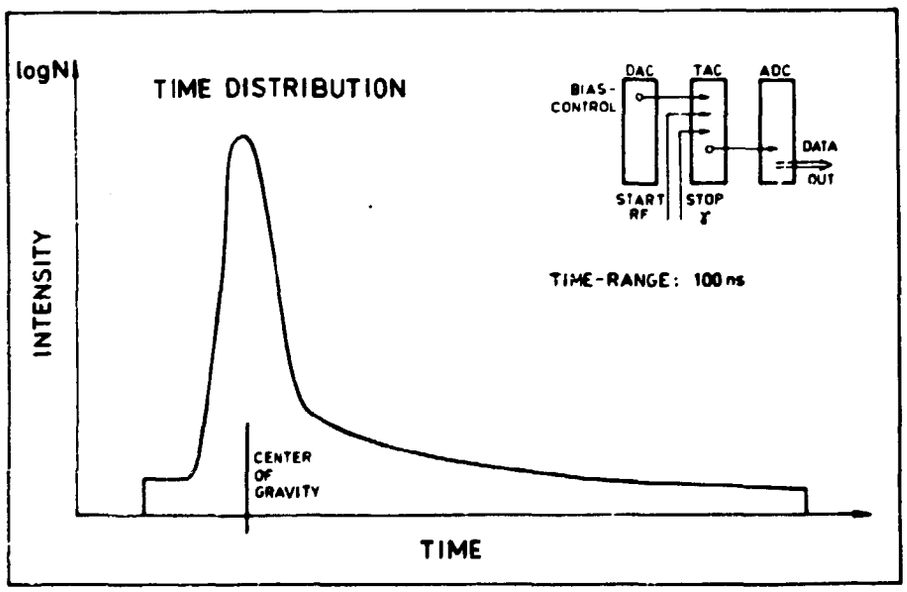

Fig. 2
Schematic diagram of time stabilization

The possible time-resolution is determined by the timing characteristics of the detector, the width of the bunch and the stability of the timing electronics. In a series of measurements we have observed fluctuations of the position of

the prompt peak in the order of 2 to 4 channels over the time period of a day. This time shift corresponds to 1...2 ns and deteriorates the significance of the data for the determination of short halflives < 1 ns. Since the shifts show no correlation with the room temperature they may be caused by load instabilities or phase changes between the RF-signal and the particle bunch induced by the tuning of the accelerator. Therefore, a method for time stabilization was implemented.

Again a program is started by the real-time system of the on-line computer in regular intervals. The center of gravity of the prompt part of the time distribution is determined and compared with the reference value which is fixed at the first start of the control program. The positional difference is transformed into a DAC-setting. The correction voltage in the range of 5 V is supplied to the CAM4.17-2 [5] TAC which changes his bias level in the range of 10 % correspondingly. If there is no stabilizable TAC available, the stabilization can be performed via the connected ADC or by switching a CAMAC-controlled delay line [6] in the start- or stop-channel. The latter method allows only for relatively rough steps of 0.5 ns.

Plunger Stabilization

Very short lifetimes in the picosecond region can be measured with the plunger method. The excited nuclei recoiling into vacuum decay either in flight with the emission of a Doppler-shifted γ-radiation or at rest on the stopper foil (plunger). The measurement of the ratio of the shifted against the unshifted component of the peak at different target-plunger distances allows the determination of the lifetime for the transition under study. For very short lifetimes the measurement of this ratio at distances < 50 μm is very important. Because of the thinness of the target foil (uniform recoil velocity) and the large target-detector distance (definite geometry) the maximal possible operational beam current has to be applied. The thermal load on the target and plunger foils causes deformations which can modify the distance which was initially fixed by means of the micrometer screw.

Therefore, the target-plunger distance has to be continuously monitored. This is performed by the measurement of the capitance between these foils with pulses from a precision pulser. The distance can be controlled by means of a CAMAC stepmotor driver [7] which is coupled to the micrometer screw. Fig. 3 shows the equipment which is used for the stabilization of the plunger distance.

Before a measurement with the plunger can be performed the parallelism of target and plunger foil has to be adjusted. Only parallel alignment of the foils allows the measurement at distances of few μm. The practical closest distance is determined with optical and electrical (point of contact) means by the experimenting physicist. Then the control is switched over to the plunger program. At first the dependence of the capitance from the distance is measured within the first 50 μm. The pulses are fed through the capitance of the foils (max. 100 pF), are amplified and digitalized. The LAM-signal of the ADC is served by an interrupt handler which accumulates 32 values before calling the control program which after registration of one value commands the stepmotor to increase the distance by 0.5 μm. After the measurement of 100 capitance values the inverse function which is proportional to the distance is computed.

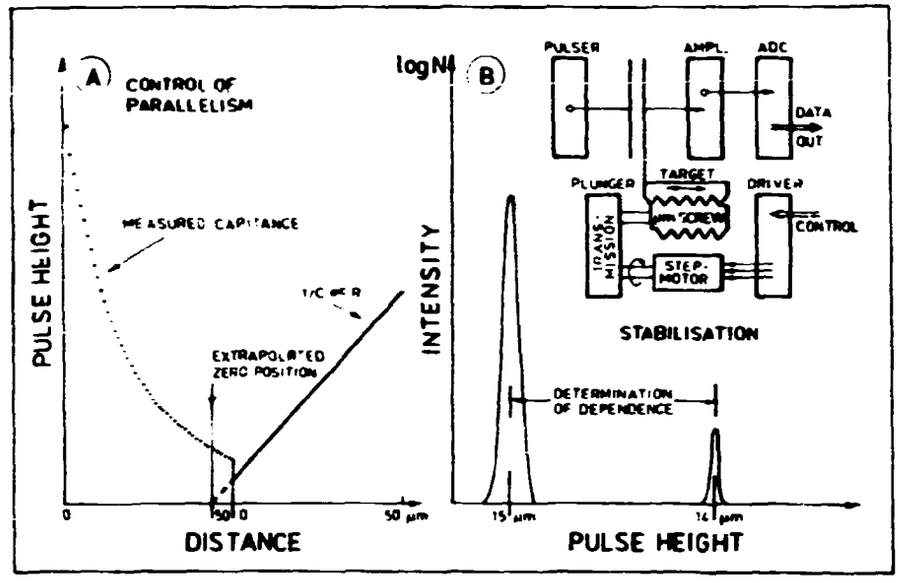

Fig. 3
Schematic diagram of plunger stabilization

Both functions are shown on the display unit (see Fig. 3 part A). The zero crossing point is computed by linear regression and is as the linearity of the curve itself a good indicator for the parallelism of the foils reached. Eventually the adjustment of the foils has to be repeated.
The physical measurements are performed at certain distances. In order to stabilize the distance the program has to determine the dependency of the change of the pulse height from the number of motor steps at the selected distance. A base width of 40 steps (≙ 1 µm) was choosen. While the γ-spectra are registered the stabilizing pulses are recorded in a special memory region which can be shown on display (see Fig. 3 part B). The width of the resulting pulser peak is a measure of the stability reached. Any necessary correction of the distance with the stepmotor is protocolled on display. Precautions have been implemented to exclude uncontrolled movement in cases such as loss of pulses or foil breakdown. The significance of the recorded data especially for distances < 50 µm was greatly improved due to the automation of the plunger measurements.

Automation of position-dependent methods

Some methods applied in nuclear spectroscopy make use of a comparison of spectra recorded at different positions or orientations of the γ-ray detector with respect to the particle beam. In Fig. 4 the geometrical arrangements for angular distribution, polarization and Doppler-shift attenuation (DSA) measurements are summarized. The physical interest lies in the determination of intensity differences for the transitions recorded at different positions. These differences are in general small, e.g. in polarization measurements, where the orientation of a planar detector is changed from orthogonal to parallel, the line intensities differ even in favorable cases by no more than 3 %. Long measuring times are needed to get sufficient statistics in order to determine the peak area with a precision better than 1 %. As a consequence the measurements at the selected positions are performed with large time distances from each other (4...12 h).

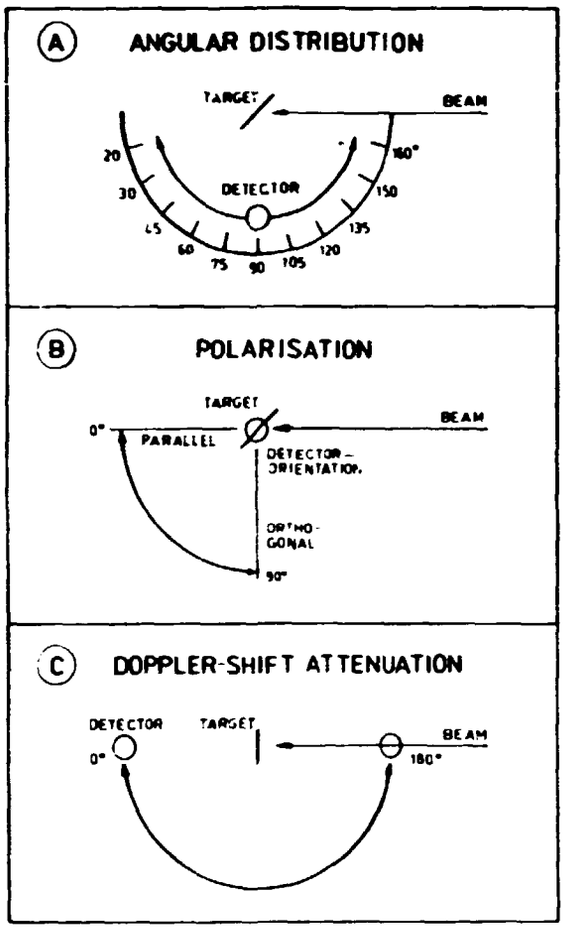

Fig. 4
Detector geometries used for angular distribution, polarization and DSA-measurements

Thus systematic deviations of the experimental conditions caused by target activation, variation of the beam size or drifts of the electronic apparatus seriously disturb the measurements. Because of their principal origin the disturbing effects cannot be excluded completely. Therefore, we tried to equalize these systematic factors for all the spectra which belong to one measurement. The detector was placed on a stepmotor driven turn-table. Instead of one very long measurement many short measuring cycles are performed so that the systematic deviations change all the spectra in the same way. The programs control the movement of the turn-table by a CAMAC controlled stepmotor driver [7] which exhibits a dynamical regime, where the motor speed between start and stop is ramped up and down. In this manner for the heavy, liquid nitrogen filled detector dewar a positioning speed of 180 degrees/minute was possible. The positional accuracy is very high (240 steps per degree), for reasons of control two feedback-pulses per degree are provided.

The data-taking task is given to different programs. The angular distribution measurements are performed by program WINK which can register up to 15 spectra of 4096 channels each for the different angles on disk. The program is activated by the real-time system in intervals of 10 minutes typical. The actual measurement is stopped and the spectrum is written to the disk. Then the next position is read from the table and the detector is positioned. The positioning is performed by the stepmotor driver alone. While this is in progress the new spectrum with the integral intensity recorded so far is read from the disk. At the end of the positioning the stepmotor driver raises a LAM-signal. The number of feedback pulses was counted by a scaler and is now compared with the turning angle. If the detector was properly positioned the new measurement is started. Otherwise, an alarm message is typed. The table of the angles to be measured can be ordered in such a manner, that the switching from one position to the other can be performed in a short time ($<$ 30 sec).

Polarization- and DSA-measurements are performed by means of program POLA. The two spectra of up to 8192 channels each are constructed in the memory of the on-line computer. Every 20 to 30 minutes the position resp. orientation of the detector is changed.

The CAMAC-controlled turn-table is now in regular use for all types of position-dependent experiments. The uniformity of the data was substantially improved. After some careful initial adjustments the measurement is executed automatically by the on-line computer. In one special experiment turn-table movement and plunger stabilization were working together.

A c k n o w l e d g e m e n t s

I would like to thank my colleagues form the nuclear spectroscopy department for many stimulating discussions. The technical support of M. Freitag and W. Schulze was very valuable. The skilful and speedy work of the technical department headed by G. Schulze which provided the stepmotor equipment is greatly acknowledged.

L i t e r a t u r e

[1] H.E. Koeppen — KRS Basis Software for Fast Measurements Internal Report RPP 6/78, Rossendorf 1978

[2] W.D. Fromm — Annual Report 1979, ZfK-408 (1980) 166

W.D. Fromm — Annual Report 1980, ZfK-443 (1981) 182

W.D. Fromm — Annual Report 1981, ZfK-4 (1982) in press

[3] F. Gabriel et al. — Universal CAMAC-ADC Preprint JINR P13-11201, Dubna 1978

[4] KFKI Budapest — CAM 4.04-1 12 Bit Analog-to-Digital Converter Instrument Manual, Budapest 1980

[5] KFKI Budapest — CAM 4.17-2 Biased Time to Pulse Height Converter Instrument Manual, Budapest 1980

[6] F. Gabriel — ZfK 5362 Delay Line Technical Description, Rossendorf 1981

[7] F. Gabriel — ZfK 5331 Stepmotor Driver Technical Description, Rossendorf 1980

MINICOMPUTER-COUPLED TWO-DIMENSIONAL (TOF,PRE)-MEASUREMENT FOR THE DETERMINATION OF FISSION NEUTRON SPECTRA UP TO VERY HIGH EMISSION ENERGIES

W. Grimm, H. Märten, D. Seeliger and B. Stobinski
Technical University Dresden, GDR

For the aim of the determination of fission neutron spectra up to extremely high emission energies, i.e. at very low emission cross sections, a high-sensitive neutron spectrometer, which works two-dimensionally to measure the neutron time of flight (TOF) and the scintillator proton recoil energy (PRE) simultaneously, is coupled to the minicomputer KRS 4200 via the standard interface SI 1.2 and CAMAC. A FORTRAN-4000/4200 program system including CAMAC and display application subroutines enables the control of the multi-channel analyser for data acquisition as well as the transfer, check, correction and the final analysis of the measured spectra.

The application of a minicomputer, which is coupled to the experimental arrangement via the instrumentation system CAMAC, in connection with the use of a high-level language, which includes the possibility of direct operation of the CAMAC devices, enables an efficient organisation of experiments. The enlargement of the computer storage capacity by external magnetic memories makes it possible to work with great data blocks, which are produced in multi-parameter measurements mainly. In the present paper an on-line experiment for the high-sensitive determination of fission neutron spectra up to very high emission energies by the two-dimensional measurement of neutron TOF and PRE is described emphasizing the developed program system.

1. Experimental arrangement and on-line coupling to the minicomputer

As represented in ref. 1 in more detail, the high sensitivity of the neutron spectrometer is based - besides the use of a high-efficient neutron detector with a voluminous NE-213 scintillator - on the heavy shielding and the electronic n/γ,μ-discrimination to reduce the experiment-specific resp. the cosmic background as well as on the two-dimensional (TOF,PRE)-measurement. In this way, one is able to select the optimum (regarding background conditions) PRE range for a given TOF channel resp. channel range. Obviously this procedure is a problem of data analysis.

Two analogous-to-digital converters, which recieve the time-to-analogous converter output and the PRE spectroscopic pulse respectively, work in coincidence with the neutron identifying output signal of the electronic particle discrimination system. The derived 12 bit sum words (64 x 64) are stored in an intermediate memory of 4 K capacity, which represents - in connection with a display unit - a multi-channel analyser. It is controllable via its SI 1.2 interface unit. Its coupling to the minicomputer is realized via CAMAC. The basic arrangement consists of a 24 bit data input device with a SI 1.2 input unit /2/ and a special control module, which converts CAMAC commands for the control of the analyser and the answer signals respectively.

The FORTRAN 4000/4200 programming language /3/ including CAMAC and display application subroutines enables a comfortable working out and modification of computer programs. To realize an extensive flexibility without excessive programming effort a program complex was developed, whose parts may be

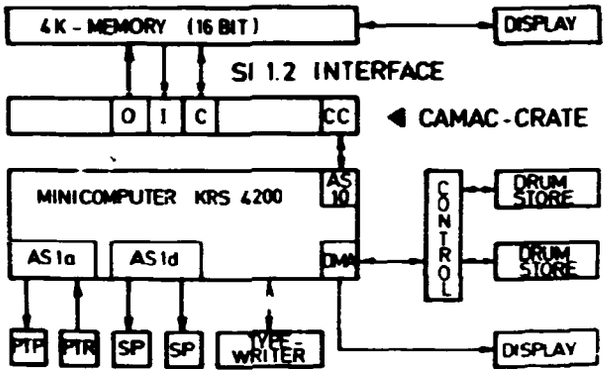

Fig. 1

Schematic representation of the KRS 4200 minicomputer and its on-line coupling to the two-dimensionally working multi-channel analyser (4 K memory in connection with a display unit): C - control device; O/I - output/input device; CC - crate-controller; AS - interface unit (AS 10 - CAMAC interface unit); DMA - direct memory access; SP - serial plotter; PTP/PTR - paper-tape puncher/reader.

connected according to the specific aim of the experiment.

2. Program system for carrying out of measurements including data check and correction

Using the program STAN, which arranges eligible CAMAC commands, the analyser for data acquisition is controllable. During a complex experiment single 4 K spectra are transferred into a defined intermediate file of the magnetic drum store (READ). Visual inspections of the spectra are possible at the analyser display unit during the measuring run, at the minicomputer display unit during the data transfer from the analyser to the minicomputer as well as by the use of the programs DISP 1 (display representation of one eligible line or column) and DISP 2 (cyclic display representation of the spectrum lines).

Possibilities of exact check of the single spectra are the determination of TOF peak positions (SPUN) and edge positions of single pulse height spectra (ZSUM). Both programs are applicated for an eligible region of the (TOF,PRE)-plane. They are the basis of coordinate calibration also.

Possible timing drifts of the spectrometer are corrected by the spectrum shifting program KVER, which allows the correction by any real value. After this procedure, if it was necessary, the 4 K spectrum of the single measurement is added to the corresponding sum spectrum (with reference to the measurements with or without sample; ADDI). The two-dimensional measurement of TOF and PRE enables the immediate correction of the pulse height dependent timing, which may appear in spite of advanced timing methods in the case of the registration of large PRE ranges especially (pulse height channel dependent spectrum shifting; KZYK).

For the purpose of the calibration and inspection it is necessary to calculate one-dimensional spectra for an eligible channel or channel range of the other coordinate in each case. For a given TOF channel the PRE spectrum extends to a maximum value PREM, which is equal to the neutron energy (fig. 2). The PRE edge position (point of inflexion) corresponds to PREM but a systematic deviation because of the distortion of the PRE response function by multiple detection processes. This effect was studied using the Monte Carlo code NEUCEP /4/ resulting a defined correction procedure /5/. Partially the calibration of the two coordinates is possible by the use of peak or edge positions of the actually measured spectra. This also concerns the PRE calibration by the determination of PRE edge positions of continuous neutron spectra as a

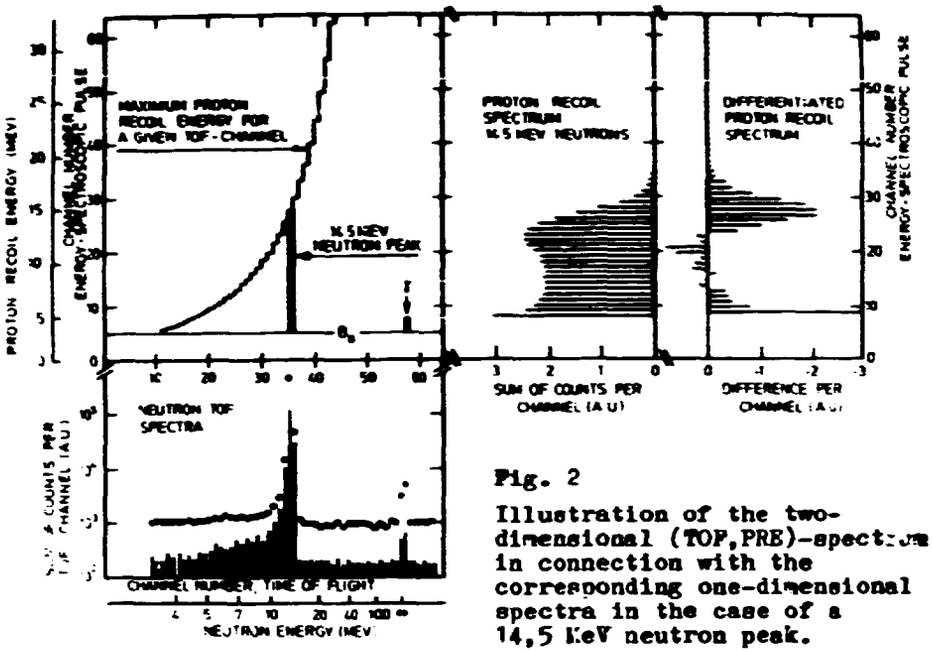

Fig. 2

Illustration of the two-dimensional (TOF,PRE)-spectrum in connection with the corresponding one-dimensional spectra in the case of a 14,5 MeV neutron peak.

function of neutron TOF resp. neutron energy due to the energy separation by TOF measurement. This method requires sufficiently good statistics and channel resolution.

Further programs were elaborated for paper-tape input/output (RLSD, WDLS), for the subtraction of spectra (SUBT), for clearage of storage files (CLRD) and for a special spectrum output via serial plotter (AUSG).

The run of several programs (READ, RLSD, ADDI, KVER, SUBT, SPUN) is observable on the display unit. All essential computer operations are recorded by a second serial plotter.

3. Data analysis programs

Generally the background is a function of TOF, i.e., it is time-correlated. This effect doesn't appear at sufficiently high PRE. Hence, one has to consider different measuring concepts. The following analysis program variants were developed:

CALC: Measurement of spectra with and without sample; determination of the effect TOF spectrum by subtraction of these spectra considering a normalization constant (according to the monitor count rates).

CABA: Sole measurement of the spectrum with sample; determination of the background from a defined region of the (TOF,PRE)-plane, where no effect could appear for physical reasons.

CEFF: Comparison of the experimentally determined spectrum of a standard source (Cf-252) with the corresponding standard spectrum (NBS evaluation /6/); determination of the detector efficiency presuming the well-known standard.

After the determination of the effect TOF spectrum for the desired PRE range the calculation of the energy spectrum is carried out in the usual way.

The detector efficiency was calculated by the use of the NEUCEP code accepting the light output data of Verbinski et al. /7/. The obtained data were joined as an efficiency matrix depending on neutron energy and PRE threshold. Measuring the Cf-252(sf) neutron spectrum we were able to confirm the calculated efficiency data up to 10 MeV neutron energy absolutely within an error of about 5 %.

The analysis is carried out cyclicly in connection with the variation of the PRE range. Hence, the user can obtain the neutron energy spectrum with a minimum of uncertainty in a relatively wide emission energy region.

Using the program LINR a fit of the experimentally determined energy spectrum to the Maxwellian distribution is possible. The output of the analysis results is realized via serial plotter including graphical representations.

Supplementary programs have been worked out for the correction of two annoying effects, which occur in the high-energetic part of measured TOF spectra especially:

- the folding of the TOF distribution by the time resolution function of the experimental arrangement (FALT),
- the displacement of the energy value, which corresponds to the determined N(E) of a TOF channel, from that of the channel centre in the case of a large TOF channel width and strongly changing spectrum gradient (KORR).

Both programs are also available for the study of the mentioned effects as a function of equipment and spectrum parameters in order to consider them in experiment conception.

4. Concluding remarks

The described on-line experiment aimed at the determination of fission neutron emission spectra in a wide energy range represents a versatile-applicable system. It is easily enlargable with regard to storage dividing, storage capacity and CAMAC application. The working out of programs is comfortable because of the application of a high-level language and the direct user-minicomputer dialogue during the program test (compiler program FOR4).

The described arrangement is used to measure fission neutron spectra up to about 30 MeV emission energy /8/.

Acknowledgement

The authors gratefully acknowledge the help of R. Krause in minicomputer and CAMAC application.

References

/1/ W. Grimm et al., Proc. Conf. on Neutron Physics, Kiew (1980), Vol. III,3. W. Grimm et al., Proc. Int. Symp. on Special Topics of the Interaction of Fast Neutrons and Heavy Ions with Atomic Nuclei, Gaußig (1980), ZfK-report (1981).

/2/ W. Rahn et al., TU-Information 05-20-74.

/3/ MOS Programmierhandbuch FORTRAN 4000/4200, MOS trommelorientiert, FORTRAN-Betriebssystem, Systemunterlagendokumentationen, VEB Robotron (1975, 1976).
U. Brückner et al., TU-Information 05-02-81.

/4/ N. R. Stanton, report COO-1545-92 (1971).
D. Hermsdorf, ZfK-315(1977)192.

/5/ H. Märten, Thesis, TU Dresden (1981).

/6/ J. Grundl and C. Eisenhauer, Natl. Bur. Stds. Pub., NBS-493 (1977).

/7/ V. V. Verbinski et al., Nucl. Instr. Meth. 65, 8(1968).

/8/ H. Märten and D. Seeliger, Proc. Int. Symp. on Special Topics of the Interaction of Fast Neutrons and Heavy Ions with Atomic Nuclei, Gaußig (1980), ZfK-report (1981).
INDC(GDR)-report, to be published.

MINICOMPUTER CONTROLLED SET-UP FOR THE PRECISE MEASUREMENTS OF FISSION CROSS SECTIONS

R. Arlt, W. Grimm, M. Josch, W. Meiling, G. Musiol, H.-G. Ortlepp,
G. Pausch and W. Wagner
Technical University Dresden, Department of Physics, Dresden, GDR

The paper gives a view of the hardware and software design of a set-up for the precise measurements of fission cross sections.

1. Introduction

The cross section of neutron induced fission is one of the most important parameters in nuclear energy and technology. For instance, this value determines the neutron flux in a reactor, which is necessary to induce the required fission event rate for energy production or for breeding of fissile materials. The knowledge of fission cross sections is especially important for such nuclides which appear in reactor fuel cycle, like 235-Uranium and 239-Plutonium.
The required accuracy in the incidence energy range which is of interest has to be better than 2 percent, in some cases an accuracy of 1 percent is required.

2. Physical method of the measurements

A deuteron beam of an accelerator hits a target where neutrons and associated particles are produced by the $T(d,n)He^4$ reaction for 14.7 MeV neutrons or $D(d,n)He^3$ reaction for 2.6 MeV neutrons and 8.4 MeV neutrons. By counting the associated particles within a cone defined by a diaphragm the rate of fast neutrons emitted in an associated neutron cone is determined. The target with the fissile layer is mounted inside a fission chamber and must completely cover the cone of the associated neutrons. Counting the associated particles and the fission events simultaneously and knowing the number of fissionable nuclei in the target, the cross section is determined absolutely.
A fast coincidence set-up strongly increases the accuracy of the measurement because it eliminates the non-time-correlated background fission events. Besides, several spectra have to be collected for checking and correction purposes.

3. Measuring equipment

The block diagram of the equipment for the determination of cross sections at 14.7 MeV neutrons incidence energy /1/ is illustrated in fig. 1. Using several detectors and conventional electronics, counting rates like α-rate, fission rate and some monitor rates are determined (fission chamber FC, timing filter amplifier FA, constant fraction trigger CFT, photomultiplier FEU, constant level discriminator CLD, time-to-pulse height converter TAC

and others). The minicomputer coupled CAMAC equipment which is used in the measurement is shown in the field framed by a dashed line. Two analogous-to-digital converters ADC are used for spectroscopy of the registered events. By means of the coincidence signal (line number 3) which is produced by a pulse shaper S, delay unit D and fast coincidence FCo, the converted pulses are signed. By rewriting the pulses the minicomputer discriminates coincident events and random events. The different counting rates are recorded employing six counters C1...C6.
By use of a multiplexer MATRIX the computer program determines the allocation of the digital measuring signals to different CAMAC modules in dependence on the actual task, i. e. using generator GEN pulses to check the function of a special electronic unit.

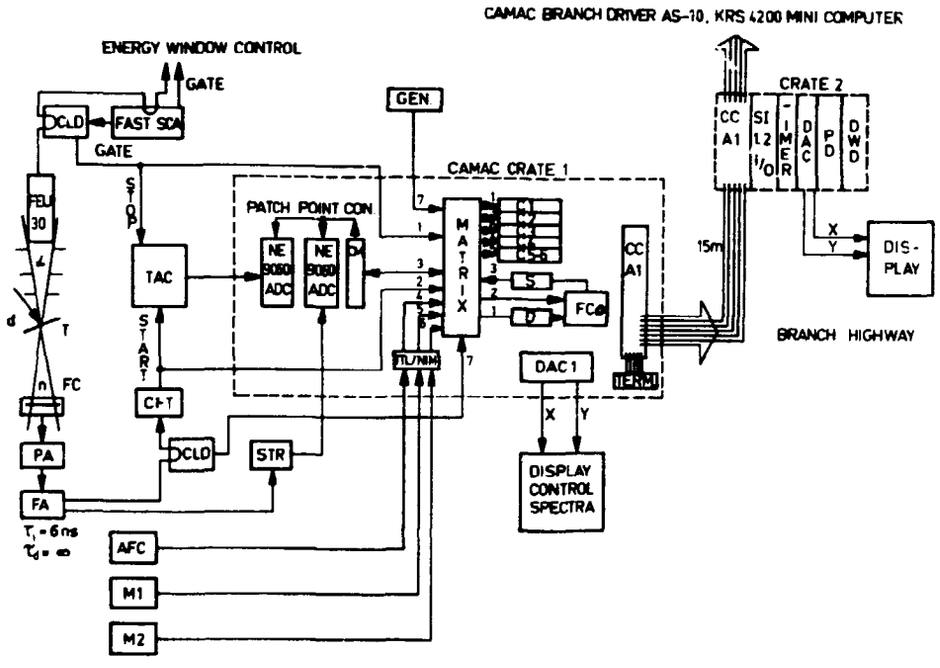

Fig. 1: Block diagram of the electronical equipment for measurements of fission cross sections with 14.7 MeV incidence energy

4. Measuring programm

The principle of the flow diagram of the automated measuring process is characterized in fig. 2. The measuring process is subdivided into single measurements, a couple of them is bound to so-called series of single measurements. At the beginning of each series a test measurement is carried out. To do this the well-defined pulses of a generator are given to the counters. The analogous-digital converters measure check spectra. The results of this test measurement are printed out giving protocol.

After this, single measurements are followed. Each single measurement is finished by the print-out of measured values, like the counting rates and print-out of calculated values, for example the fission cross section of this run.
At the end of the series a final test measurement is done only to check the counters. After the end of each series the results of all single measurements of the series are summarized and printed out in the protocol.

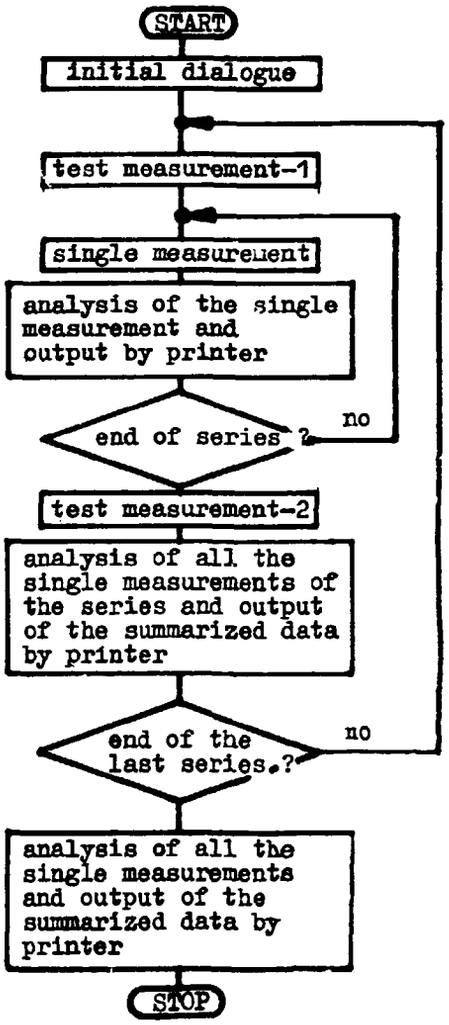

Fig. 2:
Simplified flow diagram of the measuring program

Furthermore, the program includes a command system to interrupt and to control the measuring process by the physicist.
By means of some commands, the physicist is able to break the measuring process for modifying the further measuring strategy or to stop the whole experiment. The commands exclude any destruction of the measured data. That is very important, if the measuring process is already run for many days and the operator gives an incorrect command or data input. Also there are many facilities to save the measured data after disturbances of the minicomputer, the CAMAC hardware or others.
The first measurements for the precise determination of the fission cross section were done in 1977 using this measuring program.
Concluding from the increasing requirements at the physical method, the software system must be improved and revised several times. The last revision was done in 1981. The last version of the measuring program requires all the memory of the KRS 4200 minicomputer. It is written in the problem and real-time oriented CAMAC 4200 language /2/.

5. Results

In the last years the fission cross section measurements were carried out at 2.56 MeV, 8.4 MeV and 14.7 MeV by using the same CAMAC instrumentation and measuring program. Results are published in /3/. These values have been measured many times showing a good agreement. For instance, the obtained accuracy of the values of 235-Uranium is 1.1 percent at 14.7 MeV and 1.5 percent at 2.6 MeV.
In this year, the fission cross section measurements were carried out at (8.40 ± 0.15) MeV neutron incidence energy. The fission cross section value

of 237-Neptunium obtained in these measurements is (2.151 ± 0.45) barns. The values of corrections and measurement errors are given in table 1.

	Correction (in %)	Error (in %)
Coincidence statistics		1,42
Chamber efficiency: Extrapolation to zero fragment absorption	 1,95 2,20	 0,50 0,40
Ass.part. detection: Statistics α-background neutron scattering	 3,09 0,23	 10^{-3} 0,85 0,12
Target: Areal density Layer nonuniformity virtual thickness	 0,10	 0,90 0,50 0,05
Random coincidences	3,00	0,25

Table 1:
Values of corrections and errors of measurements for 8.4 MeV neutrons

References

/1/ R. Arlt et al., Nucl. Instr. and Meth. 128 (1980) 581

/2/ K.-W. Leege, D. Werner, Rechentechnik/Datenverarbeitung 14. (1977) 3, p. 17

/3/ R. Arlt et al., Int. Conf. on Nuclear Cross Sections for Technology, 1979, Knoxville, USA, Proc. NBS 594 (1980) 995

X-RAY SPECTROMETER WITH MICROPROCESSOR

George Horkay dr. and Joseph Molnár

Institute of Nuclear Research of the
Hungarian Academy of Sciences, Debrecen

Abstract

The X-Ray Fluorescence Analysis /XRFA/ is a widespread method analysing chemical elements. For evaluation of the spectrum and the quantitative analysis a minicomputer and for data acquisition a multichannel analyser are generally used. Our purpose was to solve the data acquisition and processing with a microcomputer containing an analog to digital converter. This dedicated-equipment is quite inexpensive, easy to use and the concentration of the chemical elements in percentage is shown immediately. Changing the program /that is EPROM chips/ this microcomputer system can be easily modified for analysis of different specimens in perfectly different branches of science.

Introduction

The XRFA is a widely accepted technique enabling the bulk composition of a wide range of materials to be determined in a non-destructive manner. The principle of the analysis is wellknown [1]. Some kinds of excitation /radioactive source, X-ray, accelerated particle/ can remove electrons from the inner shells and vacancies brought about can be filled in from higher shells. The energy difference between shells will be radiated in form of so-called characteristic X-ray, characteristic for the chemical element. The energy of characteristic X-ray depends on the atomic number /Z/, and its intensity is connected with the quantity of excited atoms that is with the concentration. So quantitative analysis can be performed too.

Depending on the energy the characteristic X-ray photon getting into a semiconductor detector produces more or less electron-ion pairs collected by a charge-sensitive preamplifier. The preamplifier is followed by an analog signal processor. Its task is to produce a signal proportional to the energy absorbed in the detector. According to our experiences the task is mostly the quantitative analysis of a few chemical elements in industry, agriculture, medicine, archeology, metallurgy etc. For this aim a multichannel analyser together with a minicomputer is very complicated, expensive and requires well educated persons.

Appearance of microprocessors gave a good opportunity to apply a microcomputer containing an analog to digital converter after the analog processor. The handling of this dedicated-equipment becomes very simple and requires no expertness and the result that is the concentration in percentage is shown directly.

Quantitative XRFA

In the quantitative analysis one of the most significant problems is that the connection between the intensity of characteristic X-ray and the concentration of the chemical element is not a linear function.

One of the most significant difficulties in the quantitative analysis is the matrix effect.

The matrix effect means that in the case of a given concentration the intensity measured depends on the quantity and atomic number of the other chemical elements in the specimen.

Another source of error in quantitative analysis may be the interference of the spectral lines. For getting the intensity of a given chemical element it is necessary to consider the interference with empiric overlapping factors by means of the spectrum of known standardspecimens.

Finally knowing the intensities the concentration of chemical elements in the specimen can be determined.

Instrument hardware and software

The data acquisition and the calculation of concentration are solved by a microcomputer based on INTEL 8080A microprocessor. Fig. 1 shows the scheme of the data processing system consisting of the main units:

- logical unit,
- central processor unit /CPU/
- analog to digital converter /ADC/
- memory unit
- display control unit
- I/O interface, peripheries.

The connection with the analog signal processor is maintained by the logical unit. The logical unit gives the measuring time and interrupts the CPU when the measuring time is up and gates the interrupt-requests of the peripheral devices.

The CPU has a usual structure: it contains a microprocessor and an additional clock generator and driver /8224/, the system controller and bus driver /8228/ and the priority interrupt control unit /8214+8212/.

The analog signal processor produces a pulse proportional to the energy of characteristic X-ray photon in accordance with the chemical elements of the specimen. This analog pulse gets on the analog to digital converter /Type: Burr--Brown ADC 84KG-12 for 12 bits with 10 μs conversion speed/ together with a logical signal of convert command. The ADC is connected with the CPU through a programmable peripheral interface /8255A/ as a memory mapped I/O. The converted value is handled as a memory address. So the characteristic X-ray photons of given energy are collected on this and the neighbouring memory locations by increment of the memory location. If a convert command does not arrive the CPU is in wait state and returns to the program loop of data acquisition when a conversion is ready. The time necessary for digital processing an analog pulse and increment of the memory location is 23 μs.

The memory unit consist of two parts:

- operating program is placed in 16 kbyte PROM memory area built from 2716 chips,
- 2 kbyte RAM memory /Type: TMS 4045/ serves for data acquisition addressed by the ADC, 2 kbyte for storage of intermediate results and for stack, 3 kbyte for alphanumeric and graph display refereshing memory.

The display control system is a selfrefreshing type which can solve the screen refresh autonomously. The alphanumeric control unit can display 64x32 ASCII characters or quasi-graphic symbols. The graph display control unit can draw histogram in 512 channels. The channels can be marked by changing intensity or blanking.

The peripheries of the equipment are as follows:

- TV monitor is used for interactive measurement
- Line printer /Type: EPSON AN-101F for 21 columns/ serves for protocol.
- Hexadecimal keyboard /Type: TKI T 6084-F/ is used for input of commands and data of spectrum.
- These inputs and errors took place during the process are checked by 8 LED displays /Type: TIL 311/.

The main source program was written in the INTEL 8080 assembly language and we used a cross-assembler operating on PDP 11/40 minicomputer to get the machine codes. For checking and debugging the object program a CAMAC intelligent crate controller system produced by KFKI /Type: CAM 1.15-1/ was used.

The main program must solve the evaluation of characteristic X-ray spectrum and must give the concentration of chemical elements in percentage from the counts of pulses coming into the energy windows. The parts of the main program are as follows:

- an interactive program to control the measurement in form of a dialogue through the TV monitor
- data acquisition program serving the ADC,
- spectrum display routine for 512 chanels
- a program surveing the peaks of the spectrum, giving the area /intensity/ under the peak,
- display and printer routines to protocol the results
- floating point arithmetical routines

Up to now there are a general purpose program for measurement of intensities of spectral lines, a program for determination Ca-content of hair and for decision of concentration of golden and brass specimens.

Conclusion

The expensive systems consisting of multichannel analyser and minicomputer can be perfectly replaced by a data acquisition and processing system with microprocessor reviewed for given work. The dedicated-equipment can be suitable without any modification of hardware for analysis of most various kinds of specimens. The task is in this case to develop the software. In such away this dedicated-equipment involves the opportunity of general purpose data processing XRFA too.

Reference

[1] Bertin E.P.: Introduction to X-Ray Spectrometric Analysis, Plenum Press, New York /1978/

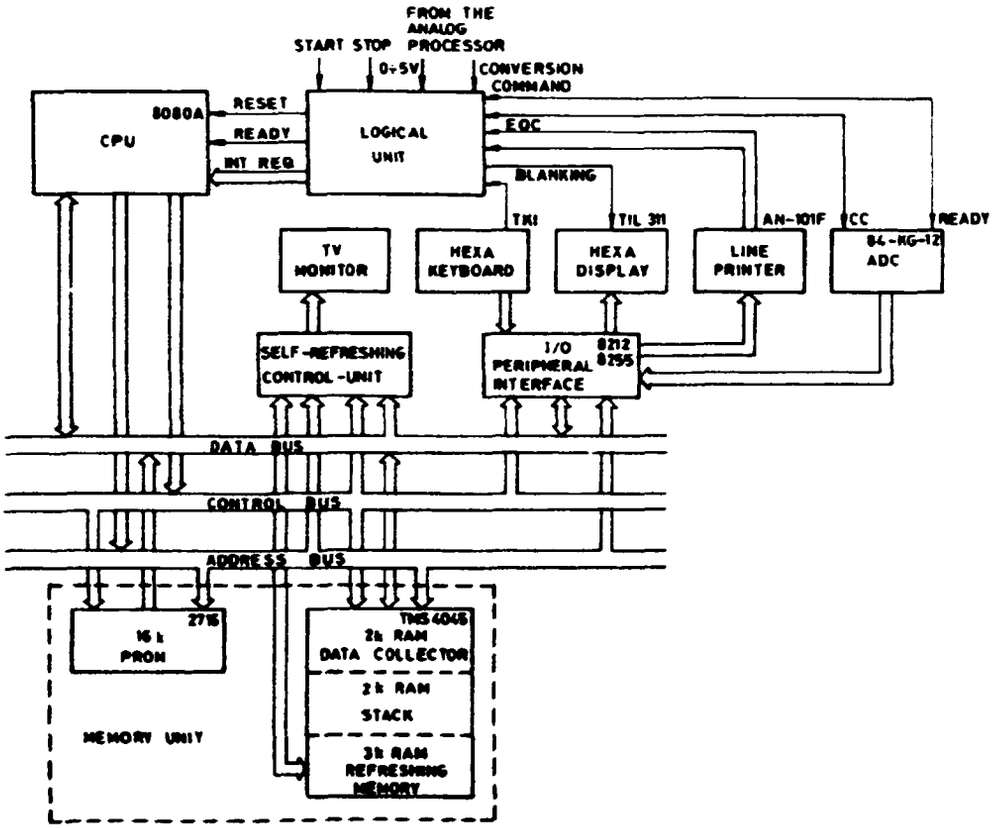

Figure 1. Block diagram of XRFA data processing system

A TIME OF FLIGHT SPECTROMETER FOR GAMMA CORRELATED NEUTRON SPECTRUM MEASUREMENTS IN /n,n'γ/ REACTIONS

B.V.Dewkin, A.A.Lychagin, V.S.Nesterenko, N.N.Shadin, A.I.Gonchar, A.I.Mironov, S.E.Suhin, Institute of Physics and Power Engineering. Obninsk, USSR and T.Sztaricskai, G.Ch.Petö, Institute of experimental Physics, Debrecen, Hungary

A neutron time of flight spectrometer based on a pulsed neutron generator have been combined with a Ge/Li/ spectrometer for the study of /n,n'γ/ reaction at 14 MeV. The spectrometer renders the simultaneous measurements of neutron time of flight spectrum /without gamma coincidence/, prompt gamma rays energy spectrum /without neutron coincidence/ and the time of flight spectrum of neutrons coinciding with two different energy intervalls of the prompt gamma rays from the same sample. The spectrometer used a computer as a data collecting and evaluating device

Introduction

The combination of a neutron time of flight spectrometer with a gamma spectrometer gives possibility for the detailed study of interactions of fast neutrons with nuclei. More experiments were carried out with gamma correlated neutron spectrometer for the study of /n,n'/ gamma reactions mechanism [1,2] and with neutron correlated gamma spectrometer for the study of the gamma multiplicity of excited nuclei [3].

An accurate study of /n,n'γ/ reaction can be achived by the combination of a nanosecond pulsed neutron generator, a neutron time of flight spectrometer and a Ge/Li/ spectrometer with accurate timing. The experimental setup described below was based on the IPPE's KG-0.3 neutron generator [4] and has been developed in a cooperation with the IEP in Debrecen.

The experimental setup

The lay out and a simplified block diagram of the spectrometer is shown on Fig.1.

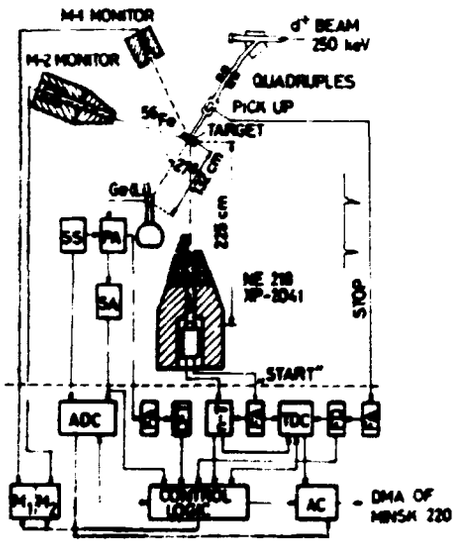

Figure 1.
The experimental setup of the spectrometer based on the KG-0,3 neutron generator.

The main parameters of the spectrometer:

- Width of the neutron pulses: 4 nsec
- Repetion rate of neutron pulses: 2.5 MHz
- Average target current: 2.5 μA

- Traget holder: 18 mm of diameter, 25o mm of length stainless steel tube with 0.2 mm thickness. A version was described in [6] .
- Energy range for neutron detection: 0.3 - 8 MeV
- Energy range for gamma detection: 0.15o - 4 MeV
- Neutron detector: 4" diameter, 2" height NE 218 with XP2041 PM tube, gamma compensation circuit described in [5] , time resolution: 1.5 nsec in the mentioned energy range with CFT, efficiency at 2 MeV: 42 %
- Gamma detector: 35 cm³ Ge/Li/, energy resolution: 4.5 keV at 3500 pps/1.33 MeV/, time resolution: 8 nsec at 8500 pps for the 847 keV line of 56_{56} with ARC timing
- Monitors: M-1 : BF_3 based long counter
  M-2 : 70 mm diameter, 50 mm height stilben with FEU-30 PM tube

<u>The function and the block diagram of the spectrometer</u>

The spectrometer is suitable for the collection of events:

I. group: TOF spectrum of secondary neutrons without gamma coincidences /0-511 ch/

III. group: TOF spectrum of secondary neutrons coinciding with gammas under the photopeak /E_{γ_1}/

IV. group: TOF spectrum of secondary neutrons coinciding with gammas in the background region above the photopeak /E_{γ_2}/

V. group: energy spectrum of prompt gammas not coinciding with neutrons

The distribution of the groups in the analyzer is shown on Fig. 2.

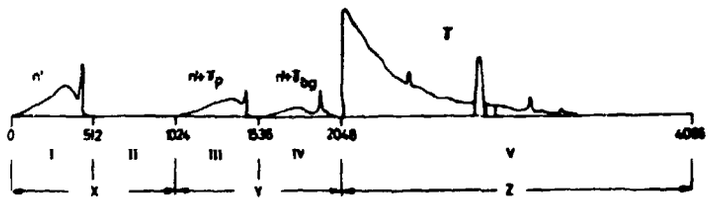

Figure 2.
The distribution of channels in the spectrometer

The block diagram of the spectrometer is shown on the Fig.3. The primary neutrons and the elastic ones are rejected by the RC rejection circuit. The neutron-gamma coincidence is detected by the COM commutator circuit.

The COM delivers output 1 if the gamma and neutron are coinciding. The special "OR" unit gives one output pulse if the gamma is in the E/γ_1/ energy range and two if the gamma energy corresponds to E/γ_2/. The COM and the "OR" circuits control the digital offset in the address counter by the X, Y and Z lines. The energy signals from Ge/Li/ are analyzed by the ADC, the time of flight signals from the neutron detector are measured by t→A→T and T→N converter. The address counter and the monitors are coupled by DMA to the MINSK-220 computer in the Computer center of IPPE. The standard programs for measurements and data evaluation are stored in the main computer.

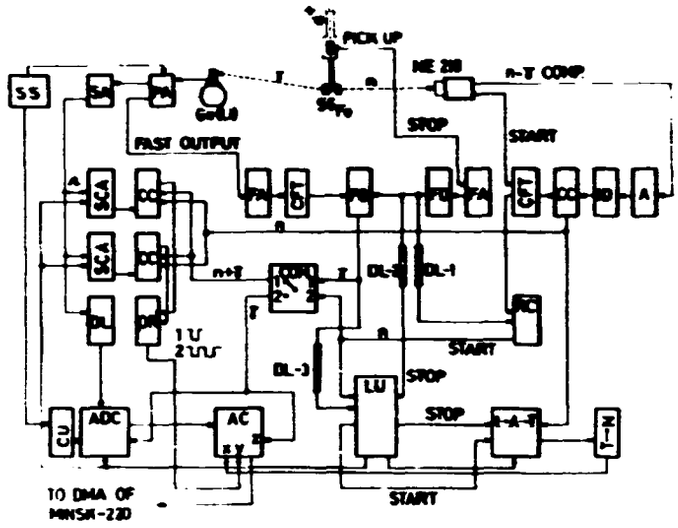

Figure 3.
The block diagram of the gamma correlated neutron spectrometer

References:

1./ G.Stengl, M.Uhl, H.Vonach: Nuclear Physics, A29o /1977/109

2./ Ю.Е.Козырь, Г.А.Прокопец : Ядерная Физика 27 /1978/ 616

3./ R.Antalik, S.Hlavač, P.Obložinsky: in 10th International Symposium on Selected Topics of Interactions of Fast Neutrons and Heavy Ions with Atomic Nuclei, Nov.17-21,Gaussig /GDR/,to be published

4./ В.Б. Ануфриенко и др.: Вопросы атомной науки и техники Серия Я.К. 5/19/1977

5./ В.Я. Баржов и др.: Препринт ФЭИ-557,1975

6./ G.Ch.Petö: Proc.Vth Int. Symp. on Interactin of Fast Neutrons with Nuclei, Gaussig /GDR/, nov. 17-21, 1975, ZfK--324, 47

A CONCEPTION FOR THE CONTROL OF A SPECTROMETER IN DUBNA FOR POLARIZED NEUTRONS BY MEANS OF A SYSTEM OF MINI, AND MICRO, COMPUTERS

W. Schwenkner
Technische Hochschule Magdeburg, Sektion Mathematik und Physik

Abstract

Computer technology and in recent times most of all microcomputer technology have revolutionized measuring techniques also in nuclear physics. In the present paper, a conception that enables a control effected completely by computers is explained. This control is realized on a spectrometer for polarized neutrons.

Functions of the control

The measuring sequence on a spectrometer is to be automated with regard to an effective utilization of the measuring time on a reactor and for radiological protection. To this end, a system of micro, and mini, computers is available. The control and monitoring of the sequence of all the operations is done by the microcomputer. The following parts of the spectrometer are controlled by it:

- three axis of the magnet goniometer,
- spectrometer arm with the analyzer,
- detector arm,
- collimators.

On the whole, the conception is extendable up to 16 components to be moved three of which can be moved simultaneously.
Two CAMAC crate controllers take control of the other spectrometer functions. These include:

- survey of the magnetic field strength of the sample magnetic field,
- temperature control of the sample cryostat,
- control of the vacuum in the neutron guides,
- release of the time-dependent triggering of the spin flippers with varying magnetic field strength,
- registration of the time-of-flight spectrum,
- securing the data and
- representation of spectrums on a graphic display.

Hierarchy

The sequence of all movements is surveyed by a microcomputer. The main part of this computer is the Robotron CPU K2521 /1/ with the microprocessor U 880. As far as storage capacity is concerned, it has a 9 Kbyte EPROM and a 3 Kbyte RAM. A control desk on the front side enables the performance of all movements in the off-line mode. In the on-line mode, the orders and data come from a crate controller. This controller KKMP-7207-2 has been developed in the JINR Dubna /2/. Using an adaptor circuit board, one can replace the microprocessor, which is equivalent to the Intel 8080, by a U 880 type microprocessor. This leads to a reduction of the expense for the software development. Moreover, its wider range of capabilities can be fully utilized, apart from the interrupt treatment. This crate controller is also the guide computer for the spectrometer.

It permits the control of only one crate. That is why there is a second controller of the same kind for the other crate. They are connected by link module of the ZfK Rossendorf. In the data transmission a conception similar to the PDV bus is used. The experimentator has small computers of the PDP 11/20 and PDP 11/70 types at hand for the evaluation of the stored data in the remote measuring central station. The arrangement and connection of the microcomputers used on the spectrometer is shown in Fig. 1

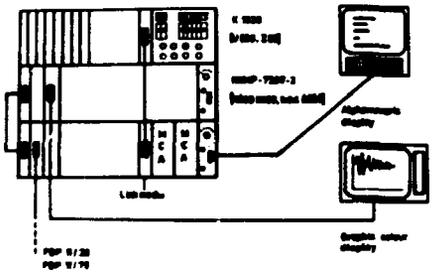

Fig. 1: Arrangement of the microcomputers on the spectrometer

Control computer for the sequence of movements
Control desk

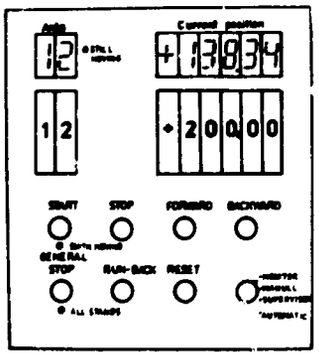

Fig. 2: Control elements on the front panel

Fig. 2 shows the position of the control, and indication, elements on the front panel:

- indication of the axis to be moved,
- indication of the present position of the adjusted axis,
- preselector switches for the axis and the intended position,
- 7 push-button keys for the functions Start, Stop, Forward, Backward, General Stop, Run-Back and Reset,
- programme selector switches Manual, Automatic, Supervised, and Monitor.

The control operations are recognized and carried out partly by interrupt (Start, Stop, General Stop), partly by polling (rest).

Operational sequence

The Start key sets that axis in motion that had been selected by means of the preselector switches. On your pressing the key, the intended position is read in and the control programme is activated. Stop enables an untimely stoppage of the selected axis. All the motions are discontinued by the General Stop key. The functions Forward and Backward are only activated as long as the respective keys are pressed. A remote control for them is prepared. Faulty operations and hardware defects that are recognized by the software are indicated as error numbers on the display.

Software

The arithmetic moduls for the calculation of all control media and position values are at hand. They enable the performance of the fundamental calculation operations, the BCD-to- dual code conversion and vice versa. These moduls use integers with a word lengths of 16 bit. Standard routines have been altered such that they calculate the angular positions in the range between 360 and -360 at an accuracy of 5 decimal digits. This ensures an accuracy of 1/100 degree on the part of the software.
For the control of the motors, programme moduls have been developed that can control up to three axis in the time-sharing mode. There are subroutines for each phase of the motion sequence that is shown in Fig. 3:

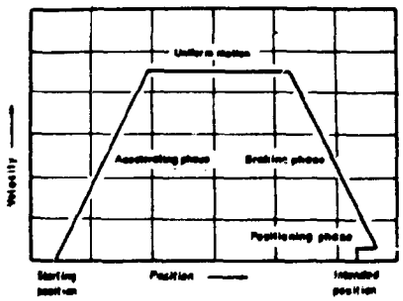

Fig. 3: Phases of the motion sequence

ACTVT activates the axis in the queue,
START switches the required operating voltages on and checks their indication,
ACCRT controls the motors during the acceleration period,
MOVE controls the motors during uniform motion,
BRAKE supervises the motion during braking,
POSTN takes control of the unilateral positioning,
STOP switches the operating voltages off and does the cancellation in the queue.

Every programme is active for no longer than 20 ms. It is started every 25 ms by an interrupt from a CTC. A modulo-4 counter connects step by step an index register to the following group of axis. The fourth interrupt is provided for a time-out function.
For testing the programmes during the development period and later on without additional development systems, a monitor is included in the programme system.

It can be switched on by means of a rotary switch on the console. The monitor is a reduced version of the SM-88 type monitor /3/.

References

/1/ Betriebsdokumentation Mikrorechner U1510 VEB Robotron 1980

/2/ Kontroller Krejta na osnowe mikroprozessora KKMP-7207-2 JINR Dubna

/3/ Generierbarer Standard-Monitor SM-88 für das Mikrorechnersystem MPS 4944 ZfK Rossendorf

MICROCOMPUTER CONTROLLED SET-UP FOR THE MEASUREMENT OF DIFFERENTIAL NEUTRON SCATTERING CROSS-SECTIONS

J. Pötnig
Technische Universität Dresden, Sektion Physik

In this paper a set-up for the measurement of differential neutron scattering cross-sections is discribed. Using microcomputers for control and data preprocessing and a minicomputer for data endprocessing, this is an example for specialization of the computing potential, the so called distributed intelligenz.
A picture of the apparatus is shown in fig. 1.

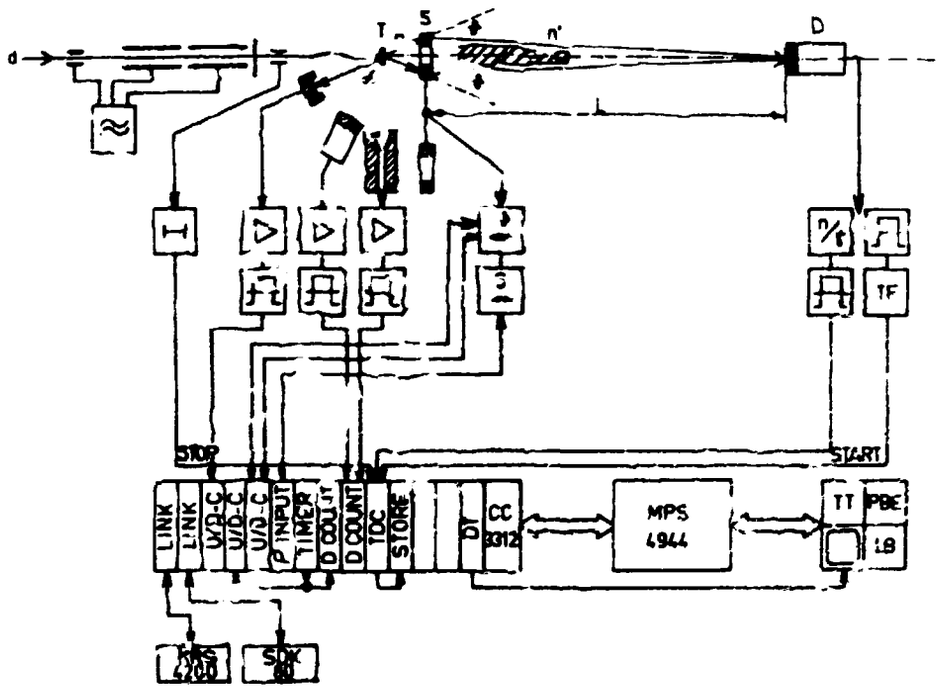

Fig.1: Measuring apparatus

The neutrons n, generated by the T(d,n)He reaction, catch a ring-shaped sample S. The detector D receives only such neutrons n', scattered in a well defined angle ϑ. This angle is determined by the geometry target T/ sample S/detector D. It can be varied changing the distance L between sample and detector. A shadow bar hinder the neutrons from a direct flight to the detector. By the help of a special sample-changing equipment it is possible to measure several samples under same conditions.

The spectroscopy is based on the time-of-flight-method. Start pulse is given from devices following the detector. Gated by a n/γ -discrimination, stop pulse comes from a pic-up system at the generator. Some other detectors are to monitor the associated particles, slow and fast neutrons.
To minimize drift basing errors a time-of-flight spectrum at one angle position is determined as the sum of some single spectra, measured for short time.
Before suming the single spectrum to the sum, it is inspected by the microcomputer and if necessary corrected.
The data endprocessing is done by a KRS 4200 minicomputer.
Another microcomputer, SDK-80, is used to control the neutron generator /1/.
The coupling between the computers goes via CAMAC-CAMAC-datalink models.
All operations to control measurements and data preprocessing are supervised by the MPS 4944 /2/. The operator has the possibility to make a dialog with the computer to input the process parameters.
The program is written in assembly language, using the CAMAC-enlargement of the assembler /3/.
To realize arithmetical computations a powerful floating point arithmetic is used.

First test were done, but long time measurements will be started in next future. About the results will be spoken at one of the next symposia.

References:

/1/ Gleisberg,F. et al.: Proceedings Gaußig 1980, 167
/2/ : MPS 4944, Firmenschrift ZfK Rossendorf, 1978
/3/ Pöthig, J.: Programming systems for CAMAC control at the MPS 4944 Microcomputer, Proceedings Rathen 1981

NEUTRON SOURCES

M.Drosg, Inst.Exp.Phys., Univ.Vienna, A-1090 Wien, AUSTRIA

An overview of currently employed neutron sources and potential new neutron sources is given. Special emphasis is laid on monoenergetic sources on one hand and on high intense neutron sources on the other hand. The advantage of accelerating the heavy reaction partner in monoenergetic sources is stressed, as is the case for the $^{1}H(t,n)^{3}He$ and the $^{1}H(^{7}Li,n)^{7}Be$ reactions. In addition, the potential of the $^{1}H(t,n)^{3}He$ reaction as a high intense neutron source, especially for radiation therapy purposes is demonstrated. In addition it is shown that both the $^{3}H(d,n)^{4}He$ and the $^{3}H(t,n)$ reactions are potential high intense white neutron sources approaching the excellent target power-per-neutron ratings of spallation sources at much lower energies and consequently with much less penetrating background radiation. Finally, new evidence supporting the evaluated differential cross sections of the $^{3}H(d,n)^{4}He$ reaction for deuteron energies up to 11 MeV is presented and the status of the differential cross sections of the $^{2}H(d,n)^{3}He$ and the $^{3}H(p,n)^{3}He$ reactions is discussed.

1. Introduction

Next year (1982) it will be 50 years that neutron sources are at the disposal of physicists. During these years many practical applications have arisen. Consequently many types of neutron sources have been and are being developed to comply with these specific needs. The primary application of neutron sources is now related to energy generation with emphasis on the provision of physical parameters for the utilization of fission- and fusion energy systems. Also important are neutron sources for medical use, i.e. for cancer therapy and bio-research in general. The other applications, like isotope production, activation analysis, neutron radiography, neutron dosimetry, geological explorations and many more have already a rather long tradition which resulted in several special types of neutron sources tailored to the specific needs. Also basic research ranging from condensed matter studies at very low energies to the very high energy neutrons for elementary particle interactions asks for specific neutron sources and their continual improvement.

Of course, the present paper cannot cover all types of neutron sources extensively. After a short overview of the more important sources it will discuss aspects of high intense neutron sources with applications in condensed-matter studies and cancer therapy. The emphasis lies on properties of monoenergetic neutron sources. These sources together with reactors and white sources from electron linacs provide about 90% of the neutron data.

2. Overview

Neutron sources can be classified in several different ways. Pulsed sources are very important because of the straightforward neutron energy determination by the time-of-flight method. With steady state (or continuous) sources the detection of a prompt associated particle is necessary to allow the application of the time-of-flight method.

In most cases the starting point in choosing a neutron source would be the neutron energy. Of the more than 14 decades of neutron energies presently accessible (from ultra cold to very high energy neutrons) about 9 decades have general importance (thermal to fast neutrons and somewhat beyond).

The next consideration would be the intensity. In several cases it is the limiting factor in performing an experiment. In other cases the available intensities are higher than the detection system can handle.

Finally the spectral distribution of the neutrons is important. Some experiments, like the measurement of neutron emission spectra after neutron bombardment require clean monoenergetic neutron sources. Other measurements, like total cross section measurements, can be done more efficient with a broad distribution of neutron energies i.e. with white neutron sources.

Usually one is not free to choose the reaction type that would produce the neutrons to the above specifications. One has to choose among the possibilities at the home installation. Therefore, in many cases the ready availability of a source overrides drawbacks in other areas.

Thus the frame of the present overview is given by the technical realization of the neutron sources.

2.1. Radioactive neutron sources

Radioactive neutron sources are small, cheap and readily available. However, the intensity is usually small, the gamma background serious and the radioactivity a health hazard. The isotropic emission of the neutrons makes them suitable for standard fields. They are used as neutron standards, as calibration sources (esp. for dosimetry purposes) and in several special applications (e.g. geological exploration).

2.1.1. Photoneutron Sources [1,2]

Photoneutrons from ^{9}Be and ^{2}H are monoenergetic if suitable gamma sources are used. ^{24}Na (half life 15 hours) gives 967 keV neutrons with Be and 263 keV neutrons with ^{2}H. ^{124}Sb (half life 60 days) gives 23 keV neutrons with Be. Sources between 1 keV and 2.5 MeV are known but not all of them can easily be used. Aside from short half lives of the gamma sources which necessitate a connection to a research reactor for producing them, neutron tails in the spectra give problems.

2.1.2. (α,n) Sources [2,3]

Neutrons are generated by the (α,n) reaction from a variety of light isotopes between ^{7}Li and ^{19}F. The most common reaction is, however, ^{9}Be (α,n) with a Q-value of 5.7 MeV. Nowadays, the alphas are from the decay of transuranium isotopes (mainly ^{239}Pu and ^{241}Am) rather than from Ra. There is a wide neutron energy distribution extending to energies up to 12 MeV.

2.1.3. Spontaneous-Fission Sources [4]

Among the several isotopes with spontaneous fission which are readily available and which have a suitable half life and a high enough neutron yield only ^{252}Cf (with a half life of 2.6 years) has gained importance. ^{252}Cf is a fission reference source with a well established neutron energy spectrum between 0.1 and 10 MeV. Its shape is well described by a Maxwellian distribution with T = 1.42 MeV [5]. Therefore this source is used for instrument calibration and efficiency determinations.

2.2. Reactor-Based Neutron Sources

The fission reactor is still a main neutron source. Most of the nuclear industry is based on it. About one quarter of the neutron data are taken with a reactor as a source.

High fluxes are needed when monoenergetic neutron beams are isolated from the wide energy distribution of reactor neutrons. Aside from Bragg scattering at low energies [6] and fast choppers the neutron window filter allows the selection of distinct neutron energies. The 6 presently used energies could be increased to about 20 energies between 30 eV and 2.3 MeV. Several of these energies are difficult to access by other means. Filtered beams are very stable and reproducible sources of neutrons with usually good signal-to-background ratio for the monoenergetic line. For more details see the literature [7-9].

2.3. Accelerator-Based Neutron Sources

One advantage over the reactor-based sources is a comparatively simple incorporation of a pulsed beam structure enabling neutron time-of-flight measuring techniques. In the case of white neutron spectra similar filtering technique as with reactors can be applied [7] to single out neutrons of just one energy. Because this is done only in special applications, filters are usually not a permanent installation like the reactor-based filtered beams.

White sources are well suited for total cross section measurements and are optimum for high resolution neutron resonance spectroscopy. White neutron spectra are generated by charged particle reactions below about 200 MeV, by spallation processes triggered by protons of about 10^9 eV and by photoneutrons from bremsstrahlung.

On the other hand there are neutron producing two-body reactions which give monoenergetic neutrons between 2 keV (from the $^{51}V(p,n)^{51}Cr$ reaction [10]) and 23 MeV (from the $^{2}H(t,n)^{4}He$ reaction [11]). Above that energy no instrinsically monoenergetic neutron source is known. To find the optimum monoenergetic neutron source reaction for a given problem the following source properties must be considered:

a) neutron yield at the maximum allowed energy loss in the target and the maximum beam current provided by the accelerator or permissible by the power rating of the target
b) additional energy spread due to angular and energy straggling of the beam in the target (and its windows) and due to geometrical factors
c) signal-to-background-ratio or possibility to correct for the background
d) apparent energy spread due to transit time of charged particle beam in target.

In many cases, however, the practicability of a source at a given facility will be decisive. Fig.1 compares the neutron yield for neutron production up to 20 MeV with a 100 keV energy spread for $^{7}Li(p,n)^{7}Be$ and $^{1}H(^{7}Li,n)^{7}Be$ with Q = -1.644 MeV, for $^{3}H(p,n)^{3}He$ and $^{1}H(t,n)^{3}He$ with Q = -0.764 MeV and for $^{2}H(d,n)^{3}He$ with Q = 3.269 MeV. The reactions $^{3}H(d,n)^{4}He$ and $^{2}H(t,n)^{4}He$ with Q = 17.590 MeV are not included because their yield is so small that, except for the 14 MeV resonance, where it reaches 10^7 n/(sr·μC), the curve is below the lower frame line. The 0° cross sections for these reactions are shown in Fig.3 of Ref.11.

The contribution of straggling to the energy spread depends on v^2 and the target time spread depends on v of the projectile particle. Therefore, if the total neutron energy spread is compared, a smaller cross section can provide the same effective yield as was shown for the production of 8 MeV neutrons by the $^3H(p,n)^3He$ reaction when compared with the $^2H(d,n)^3He$ reaction [12].

However, in many cases a good signal-to-background ratio is more important than a high yield. For each reaction there is only a limited range over which the source is truly monoenergetic. Between 8 and 14 MeV only the $^1H(t,n)^3He$ reaction is intrinsically monoenergetic. Therefore it is the only reaction that can be used in this energy range to measure double differential neutron emission spectra of materials associated with fusion plasma containment [13]. The reduction of background from the target structure (for the $^3H(p,n)^3He$ reaction) was discussed previously [14].

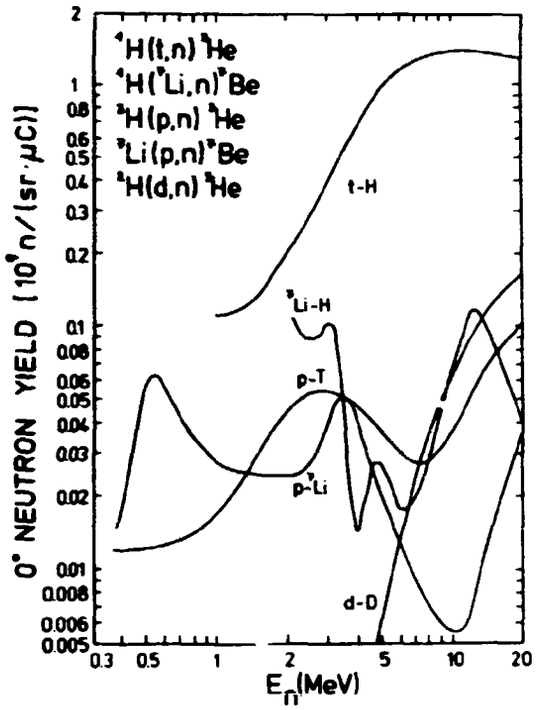

Fig.1. Comparison of primary neutron yields at zero degree for a neutron energy spread of 0.1 MeV.

Another difference in background behaviour stems from the reaction kinematics in the laboratory system. Three distinctly different emission characteristics can be recognized:

a) neutron emission both isotropic in energy and intensity (e.g. 14 MeV neutrons from the $^3H(d,n)^4He$ reaction)
b) forward peaking of both energy and intensity (e.g. $^2H(d,n)^3He$ reaction at higher energies)
c) containment of neutrons in a forward cone (whenever projectile is heavier than target, e.g. $^1H(t,n)^3He$ [15] and $^1H(^7Li,n)^7Be$ [16]).

In the case of the usual zero-degree position of the sample, case a) is obviously the worst case. All of the room is illuminated evenly with neutrons of similar energy so that energy discrimination is of little help. Case b) is already much better. Neutrons emitted under back-angles have less energy and their intensity is smaller. Consequently room background can be suppressed more easily. Case c) is the optimum. The restriction of neutrons into a forward cone makes even shadow bars for scattering angles outside the neutron cone unnecessary. Besides, the room background will be minimum.

The hydrogen-based reactions allow absolute neutron flux determination or flux monitoring by means of the associated particle method [17,18]. For $^7Li(p,n)^7Be$ the associated gamma ray technique [19] can be applied for the same purpose.

2.3.1. The Four Important Monoenergetic Neutron Sources

The $^3H(d,n)^4He$, $^3H(p,n)^3He$, $^2H(d,n)^3He$ and $^7Li(p,n)^7Be$ reactions are the most used

monoenergetic neutron sources. Their status and that of other monoenergetic sources was reviewed only recently [11,20]. Therefore only an updating is necessary.

$^3H(p,n)^3He$. The (10±4)% lower solution (as compared to the Liskien evaluation [21]) for the zero-degree excitation function at the resonance near 3 MeV [22] is supported by an R-matrix analysis [23]. However, the overall agreement in the shape is still not satisfactory. Part of the problem is the strong energy dependence of the cross section which requires very accurate energy determinations. The discrepancy between the total n-^{3}He cross section and the sum of the elastic and the $^3He(n,p)^3H$ cross sections in the several MeV range is still not settled.

$^2H(d,n)^3He$. Incomplete differential cross sections for energies up to 40 MeV [24] have been included into the evaluation [25]. The good agreement of the integrated data with a previous prediction by extrapolating own data [26] is shown in Fig.2.

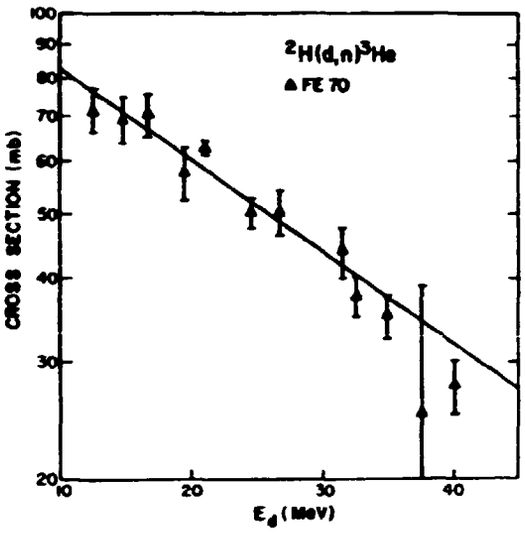

Fig.2. Integrated cross section of the reaction $^2H(d,n)^3He$. The line is the prediction of Ref.26, the data are from Ref.24.

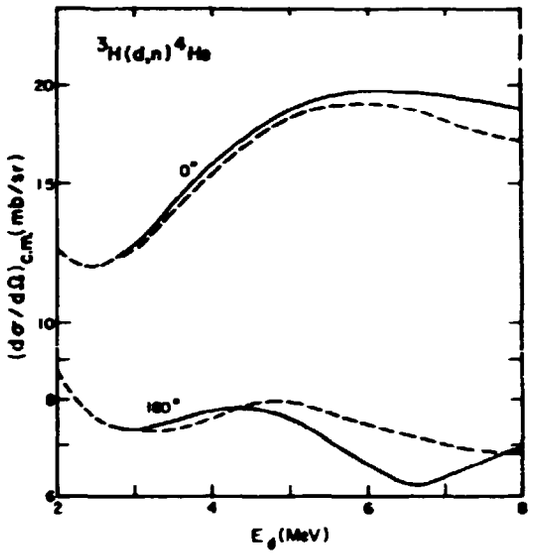

Fig.3. Energy dependence of the 0° and the 180° cross sections of the reaction $^3H(d,n)^4He$. The dashed curves are from Liskien (Ref.21).

$^3H(d,n)^4He$. Three excitation functions of the reaction $^3H(d,\alpha)n$ at 18.0°, 27.3° and 37.0° between 4 and 11 MeV [27] coincide above 7 MeV (where own data had been available) with the predictions of the previous evaluation [28]. Below 7 MeV the evaluation was slightly revised by including the new data and it was extended down to 3 MeV [29]. This good agreement shows that the Liskien evaluation of this reaction [21] is obsolete at higher energies because it differs up to 20 % (at 6.5 MeV and 180°) as shown in Fig.3.

$^7Li(p,n)^7Be$. New integrated cross section data [30] show for energies up to 200 MeV a simple energy dependence of the form $\sigma_T(E) = \exp(-1.05 \ln E_p + 6.77)$ with E_p in MeV and σ in mb. A similar relation applies for the total n-^{4}He cross section as was shown before [31]. Another simple energy dependence is that of the total $^2H(d,n)^3He$ cross section [26].

The availability of bunched heavy ion sources suggests the exchange of the target and projectile and to produce neutrons via the $^1H(^7Li,n)^7Be$ reaction [16]. Neutrons are emitted into a forward cone only, giving all the advantages discussed above. The "monoenergetic range" is from 1.44 to 3.84 MeV, up to 8.18 MeV there will be additional neutrons from the excitation of the 0.429 MeV state in ^{7}Be. Although

the 0° yield of this reaction is quite favourable (see Fig.1) the presence of the 180° c.m. neutron group at 0° complicates the situation. First measurements of this reaction have been reported [32]

2.3.2. White neutron sources

Photo Reactions. The typical installation [33] is an electron linac for 50 to 150 MeV electrons with a heavy target (e.g. Ta, W, U) in which bremsstrahlung is generated releasing photoneutrons (and fission neutrons) from the target. Recently[34] a cheap low-energy version was proposed with electrons of less than 12 MeV. A combination of Ta for the (e^{-},γ) process with Be or ^{2}H for the (γ,n) process would give neutrons with $E_n < 4$ MeV. There would be no high energy background, the induced radioactivity would be small. The machine, its installation (less shielding), its operation and maintenance would be relatively cheap. With the same power dissipation in the target the neutron intensity would be about the same as in the bigger machines. However, the necessity of a long target (about 30 cm) reduces the source brightness and increases the time spread [35].

Spallation. Protons with energy of about 10^{9} eV produce in a heavy target (Pb,U) neutrons, charged and neutral pions, γ-rays, spallation products, fission etc. These high energetic primary products produce secondary ones and a cascade develops. Up to about 30 neutrons per incident 800 MeV proton [36] are generated. Most of them have an energy of less than 1 MeV. For spallation sources the target power per neutron is minimum. Therefore they can be used for high flux sources. However, the high energy particles produce rather severe high energy background of all kinds.

Charged Particle Reactions. With smaller accelerators nuclear reactions of protons or deuterons can be used for efficient neutron production. Be [37-39] and Li [39,40] are favourites as target materials. Protons on Be have been suggested for cancer therapy [37], and the Fusion Material Irradiation Test (FMIT) facility in Richland, Washington is based on deuterons on Li [40].

2.4. Nuclear Explosions

The extremely high neutron flux after underground nuclear explosions allows measurements and techniques not feasible with other sources. At a capture probability close to one multiple neutron capture becomes quite likely allowing the production of heavy isotopes. In addition, cross section measurements with minute amounts of sample material, of rapidly decaying radioactive material and in the presence of high radioactive background are feasible. The occasions to use such a source are fortunately scarce and consequently these sources have no general importance.

3. High Intense Sources with Triton Beams

The use of triton beams on hydrogen does not only give low background due to the forward cone as discussed in 2.3.1., but also a high yield of basically MONO-ENERGETIC neutrons up to neutron energies of 17.5 MeV. By optimum choice of the target thickness and by dumping the triton beam in a well shielded beam dump it is therefore possible to avoid, in principle, the production of neutrons below a certain energy as is needed in cancer therapy [41]. It was shown [15] that with a beam of 20.2 MeV tritons on hydrogen and a neutron cut-off at 10 MeV (i.e. with

a mean neutron energy of 12 MeV) the target power per neutron is about a factor of 70 less than for the $^3H(d,n)^4He$ with the same high energy neutron dose at 1 m. The (white) Li(p,n) source which was also proposed to be used in cancer therapy[37] has the same favourable power per neutron dose rating. However, the average neutron energy is lower (9.6 MeV), there is no low energy cut-off and there is neutron background at back angles.

Table 1. Dissipated Target Power per Neutron

Reaction Type	Incoming Energy (MeV)	Power per Neutron (GeV/n)	For 0^on-Production (GeV·sr/n)
$^3H(d,n)^4He$	0.2	ca. 5	ca. 40
e^--Ta	140	3	
$^9Be(d,n)$	15	1.2	
Li(d,n)	35	1	
$^1H(t,n)^3He$	15	0.8	<0.8[a]
$^2H(t,n)$	16[b]	0.3[c]	0.5
$^3H(t,n)$	>34	?	?
fission	-	0.2	
p - U	1000	0.05	
p - Pb	1000	0.02	

a) for E_t = 26 MeV, no break-up
b) target 6 MeV thick
c) estimate from incomplete angular distribution

Table 1 compares target power per neutron ratings of various reactions. Usually, the power dissipated in the target is the ultimate limit for high intense neutron sources. Therefore, this rating is a basic property of a reaction to be used for a high intense neutron source. New in this list is the inclusion of the reactions using triton beams. Whereas $^1H(t,n,)^3He$ gives a high monoenergetic yield in the forward direction, the $^2H(t,n)$ and $^3H(t,n)$ reactions have high break-up yields, i.e. a wide energy distribution of neutrons. Own data are available for the neutron yield from the t-^2H reaction, but no cross section data are available for the t-^3H reaction. It takes 33.928 MeV for the complete breakup into 2 protons and 4 neutrons, i.e. <u>two thirds</u> of the nucleons are neutrons. Considering the improvement by going from t-^1H to t-^2H, a similar or even a more pronounced step could occur from t-^2H to t-^3H. This would take the reaction $^3H(t,n)$ close to 100 MeV/n for the target energy per neutron. The obvious advantage is the lack of very high energy background. The practicability of this source or its inpracticability is still to be shown.

4. Conclusion

The additional evidence by the associated particle data [27] verifies the latest evaluation of the $^3H(d,n)^4He$ reaction [29] well within its total uncertainties of about 2% [28]. For the differential cross sections of $^2H(d,n)^3He$ the situation has been even better for some time already [28]. So accurate reference cross sections are available covering neutron energies between 2 MeV and about 35 MeV which can be used e.g. for detector calibrations [42]. For the $^3H(p,n)^3He$ reaction inconsistencies of the order of 4% exist for proton energies below 10 MeV [22].

The use of triton beams with hydrogen targets promises high neutron yields with low power dissipation in the target. Clean high energy neutrons to be used in cancer therapy (or radiation damage studies) are available from the t-^1H reaction. Intense white neutron spectra which could be moderated and used in condensed matter studies are available from the t-^2H (and the t-^3H) reaction. The lack of very high energy background components and the adequacy of a rather small accelerator makes these reactions attractive when compared with the spallation process. However, the technical realization of high intense triton-beam-based neutron sources will not be straightforward, neither is it for high intense spallation sources.

References

1) K. Mueck, F. Bensch, J.Nucl.Energy 27, 857 (1973)
2) K.W. Geiger, p.43 of Report INDC(NDS)-114/GT (IAEA, Vienna 1980)
3) K.W. Geiger, L.van der Zwan, Nucl.Instr.Meth.131, 315 (1975)
4) M.V. Blinov, p.79 of Report INDC(NDS)-114/GT (IAEA, Vienna 1980)
5) J. Boldemann, D. Culley and R. Cawley, p.916, Proc.Int.Conf. Neutron Phys.and Nucl.Data for Reactors in Harwell (OECD, Paris 1978)
6) G.A. Briggs, W.G. Stirling: "Neutron diffraction facilities" (ILL,Grenoble 1976)
7) A.J. Mill, J.R. Harvey, p.135 of Report INDC(NDS)-114/GT (IAEA, Vienna 1980)
8) R.B. Schwartz, Nat.Bureau of Standards Special Publ., NBS-493, 250 (1977)
9) R.E. Chrien, H.I. Liou, R.C. Block, U.N. Singh and K. Kobayashi, Nat.Bureau of Standards Special Publ. NBS-493, 255 (1977)
10) J.B. Marion, in Fast Neutron Physics (eds.J.B.Marion and J.L.Fowler; Interscience, New York, 1960) part 1, ch.1.D.
11) M. Drosg, p.201 of Report INDC(NDS)-114/GT (IAEA, Vienna 1980)
12) G. Haouat, S. Seguin, J.P. Lochard, J. Sigand, J. Lachkar, p.21 of Report CEA-N-1798 (Bruyeres 1975)
13) D.M. Drake, G.F. Auchampaugh, E.D. Arthur, C.E. Ragan, P.G. Young, Nucl.Sci. Eng.63, 401 (1977)
14) M. Drosg, G.F. Auchampaugh, F. Gurule, Report LA-6459-MS (LASL, Los Alamos 1976)
15) M. Drosg, Z.Phys.A298, 297 (1980)
16) M. Drosg, Report LA-8842-MS (LASL, Los Alamos 1981)
17) M. Meier, Bureau of Standards Special Publ. NBS-493,221 (1977)
18) N.E. Hertel, B.W. Wehring, Nucl.Inst.Meth.172, 501 (1980)
19) J.D. Brandenberger, Nat.Bureau of Standards Special Publ. NBS-493,227 (1977)
20) M. Drosg, p.241 of Report INDC(NDS)-114/GT (IAEA, Vienna 1980)
21) H. Liskien and A. Paulsen, Nucl.Data Tables 11,569 (1973)
22) M. Drosg, Report LA-8215-MS (LASL, Los Alamos 1980)
23) G.M. Hale, personal communication (LASL 1980)
24) R.W. Fegley, Thesis, Univ.Cal. (Davis, 1970)
25) M. Drosg, Report LA-8538 (LASL, Los Alamos 1980)
26) M. Drosg, Nucl.Sci.Eng.65, 553 (1978)
27) M. Ivanovich, P.G. Young, G.G. Ohlsen, Nucl.Phys.A110,441 (1968)
28) M. Drosg, Nucl.Sci.Eng.67,190 (1978)
29) M. Drosg, Z.Phys.A300,315 (1981)
30) T.E. Ward, C.C. Foster, G.E. Walker, J. Rapaport and C.A. Goulding,to be published
31) M. Drosg, Report LA-7269-MS (LASL, Los Alamos 1978)
32) S.M. Shafroth, C.R. Gould, J. Dave, S.A. Wender, Bull.Am.Phys.Soc.26,593 (1981)
33) S. Cierjacks, p.893, Proc.Int.Conf. on the Interaction of Neutrons with Nuclei, CONF-760715-P2 (Lowell, 1976)
34) C.D. Bowman, Bull.Am.Phys.Soc.24,878 (1979)
35) C.D. Bowman, A.D. Carlson, O.A.Wasson, R.A. Schrack, J.W. Behrens, R.G. Johnson, K.C. Duvall, p.119 of Report INDC(NDS)-114/GT (IAEA, Vienna 1980)
36) G. Manning, p.829, Proc.Int.Conf.Neutron Phys. and Nucl.Data for Reactors, in Harwell (OECD, Paris 1978)
37) M.A. Lone, B.C. Robertson, p.308 of Report INDC(NDS)-114/GT(IAEA, Vienna 1980)
38) G. Auchampaugh, S. Plattard and N. Hill, Nucl.Sci.Eng.69,30 (1979)
39) M.A. Lone, C.B. Bigham, J.S. Fraser, H.R. Schneider, T.K. Alexander, A.J. Ferguson, A.B. McDonald, Nucl.Instr.Meth.143,331 (1977)
40) D.L. Johnson, F.M. Mann, J.W. Watson, J. Ullmann, W.G. Wyckoff, Jour.Nucl. Materials 85, 467 (1979)
41) W.G. Cross, p.648 of Proc.Int.Conf. Neutron Phys. and Nucl.Data for Reactors in Harwell (OECD, Paris 1978)
42) M. Drosg, D.M. Drake, P. Lisowski, Nucl. Instr. Meth. 176,477(1980)

THE PNG-300 NANOSECOND PULSED GENERATOR

L Vasváry, T Sztaricskai, G Pető; Institute of Experimental Physics, Debrecen
B.V.Devkin,
Institute of Physics and Power Engineering, Obninsk.

A nanosecond pulsed neutron generator with klystron bunching system has been constructed. The width of the neutron pulses is about 2ns with a repetition of 400 ns. The compression factor of the klystron bunching system is about 10. The average neutron yield is 10^9 n/s. The neutron generator has been constucted for the study of gamma transition in higher excited states in the interactions of fast neutrons with nuclei.

Introduction

The accurate prompt gamma rays spectrometry can give data to the study of the interaction of fast neutrons with nuclei. The use of a pulsed neutron source for prompt gamma analysis increases the peak to background ratio and decreases the gamma detectors load. The use of a nanosecond pulsed neutron source allows a combination of e neutron time of flight spectrometer with gamma detector for more complex investigation too. A report on the construction of the nanosecond pulsed neutron generator has been given earlier 1>. The realisation of this project was helped by the Institute of Physics and Power Engineering, Obninsk.

The pulsed ion source

The short pulse duration and high ion current are basic requirements in the case of different pulsing methods. After comparing the different systems, the klystron bunching method was chosen 2> . Though the velocity modulation after acceleration would produce shorter pulses, but because the lack space in our Institute this method would make the scattering free arrangement much more less perfect.

The RF ion source consists of a 45 MHz push-pull oscillator constructed of two GI6B metal-ceramic electron tubes. The output power of the high frequency oscillator is about 200 W. The extraction electrode is protected by the usual quartz cup. The gas consuption of the ion source is regulated by a mechanicel leak. The ion current of the source is higher than 1 mA.

The deuterium beam from the ion source is focused by a simple electrostatic immersion lens. Because the ground potential of the second part of the immersion lens, the base plate and the first part of the lens is connected to the variable focusing voltage of 0-30 kV. The extraction voltage, adjustable up to 6 kV, is added to the focusing voltage. The distance between the ion source and the bunching system is about 60 cm, so an additional focusing lens became to be neceseary. This einzel-lens consisting of three diaphragms at about 20 kV, creates a D^+ beam of 2-3 mm of diameter on the first diaphragm of the bunching system and does not charge the energy of the beam.

The first two deflector electrode in the bunching system corrects the beam position in the system by DC voltages. The D^+ beam is chopped by sinusoidal 10 MHz signals with an amplitude of 400-800 V by the second deflector electrode pair. Changing the amplitude of the chopping signal, pulses of 20-30 ns duration can be obtained. When the energy of the entering beam is 20 keV and the frequency of the velocity modulation is 20 MHz, the distance between the two gaps of the klystron is about 35 mm. After entering the acceleration tube, the

beam is accelerated on a lenght of 80 cm, and it reaches the tritium target. Supposing an accelerating voltage of 200 kV, the amplitude of velocity signal is about 1500 Volts.

Applying a selector signal of 50ns width an amplitude of 300 V on the third pairs of deflector plates, the sequence of the neutron pulses can be changed 3>.

The electronic control units

The pulsed ion source is controlled by several units. These units are:

1/ The X-tal controlled base oscillator generating both the 10 MHz and 20 MHz signals as well as triggers the selector amplifier. The phase of the trigger signals can be shifted independently from the 20 MHz signals.

2/ Preamplifiers. They gain the signals, coming from the base oscillator to a suitable level for the operation of the power amplifiers.

3/ Power amplifiers.

- A push-pull 10 MHz amplifier consists of two PL 500 electron tubes providing symmetrical signals.
- A 20 MHz power amplifier, with asymmetrical output, consists of a GU-50 electron tube.
- The selector amplifier, consisting of a triggered blocking oscillator with an E236L electron tube.

The acceleration tube and target holder

The acceleration tube are constructed in a homogeneous field metal-glass bond, including 16 acceleration electrodes. The voltage of the electrodes is supplied by a resistor series wich are embeded in epoxy resin. The total resistance of these resistors are 300 Mohm.

The target holder has been constructed using a minimum. The solid target itself has an aluminium backing. Because of the small current, the thermal dissipation is not large, therefore the target cooling is made by forced air.

Because the target is placed on high voltage, the target current is connected to a current to frequency converter. An optical isolation is used at the target current measurement. The analogue signals of the pick-up electrode are feeded by similar way to the ground potencial. The pick-up signals visualization is made by a 200 MHz oscilloscope.

High voltage power supply

The AC voltage for the 150 kV high voltage transformer is stabilised by a 5 kW AC regulator. The primary voltage of the high voltage transformer is variable by a motor driven variac. The high voltage power supply consists of a voltage doubler with selenium rectifiers. The 70-300 kV output of the power supply is breakdown protected by an 200 kohm high voltage resistor.

Vacuum system

The vacuum system of the generator consists of a 1000 l/s diffusion pump, a mechanical duplex pump /20000 l/h./, a liquid nitrogen trap and some additional components. The ion source is placed on the lower end of the vacuum manifold, the acceleration tube with the bunching system stands on the upper end of it.

Remote control, control desk

The generator is remote controlled by the control desk. The ion source, the bunching system and the acceleration voltage can be contolled and most of their parameter can be tested from the control desk. The high voltage part of the neutron generator: the high voltage power supply, acceleration tube, target are shielded by thin aluminium sheets in a distance of 1.70 m and the high voltage is interrupted by the opening of the door in the shield.

The setting in to operation, the adjustablement of the optimal parameters has been done by a 70 x 50 mm^2 stilben, FEU-30 PM neutron detector based TOF spectrometer. The start pulses used in the TAC are originated from the basc oscillator. The minimum neutron pulse width obtained by generator is about 1.5-2 ns.

A block diagram of the generator is shown in Fig. 1.

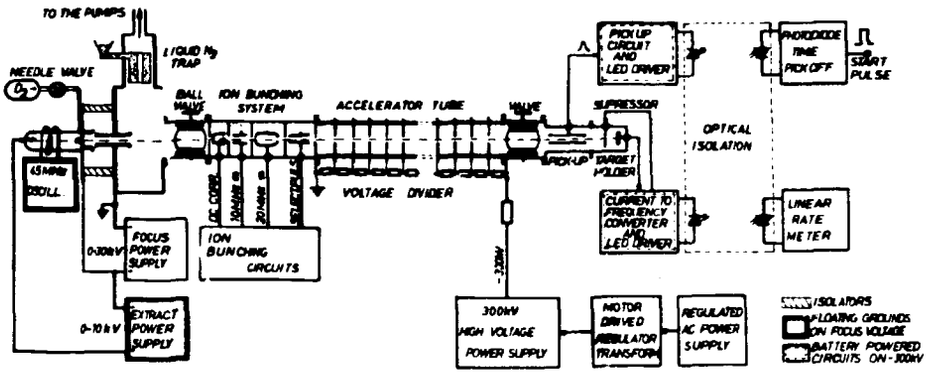

Fig.1. The principal block diagram of the PNG-300 neutron generctor

References:

1./ T Sztaricskai, L Vasváry, G Pető: ZfK-324, /1976/ 218.

2./ D Lehmann, D Seeliger, A Snogina: Nanosekunden-Pulsung stationär Teilchhen-beschleuniger. ZfK-268/1974/

3./ V B Anufrienko: Preprint FEI-307 /1971/

amount of aluminium.

COMPUTER CONTROLLED POWER SWITCH MODULES FOR SMALL ACCELERATORS

F. Gleisberg, G. Jacob[1)]
Technische Universität Dresden, Sektion Physik, GDR - 8027 Dresden
[1)] now Zentrum für Forschung und Technik der Mikroelektronik, Dresden

One of the most important problems to realise an automatical control of an accelerator by a mini- or microcomputer is the development of final control elements and transducers. Other problems are t' ' realising of the interface and the programming of control- and optimization routines [1]. The different current- and voltage supply units depict the major part of all the final control elements at a cascade generator. A computer control of the control elements must be possible. A part of these power supplies are located at high voltage potential. Hence additional demands are following:

- adjustability by a computer
- high stability of the output voltage or the output current
- low noise of the output voltage
- great control range
- high efficiency
- small dimensions
- potential difference of 300 - 500 kV must be bridged between computer and power supply unit.

A cascade generator with a high frequency ion source is represented on figure 1.

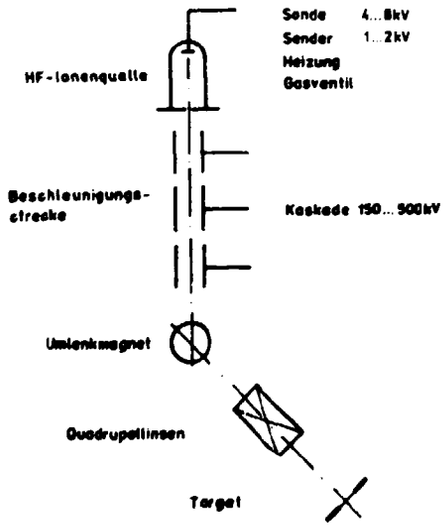

Fig. 1: Cascade generator with high frequency ion source

Power supply units of 10 kV, 2 kV, 20 V and 2 V are necessary on the high voltage potential. Then the main accelerating voltage follows. Less it has to be adjusted as to be stabilized and supervised. The different low voltage power supply units are on earth potential to supply the deflecting magnet and the quadrupole lens doublett. Instead of the high frequency ion source a duoplasmatron ion source must be applied to generate a beam current greater ten milliampers.

On figure 2 a duoplasmatron ion source with extracting and focusing electrode is shown. A great number of power supply units are necessary on high voltage potential: 50 kV; 10 kV; 200 V/10 A; 50 V; 3 V.

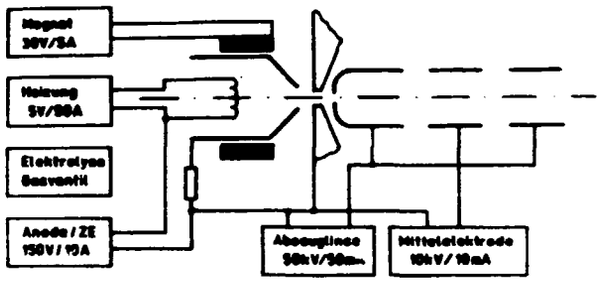

Fig. 2: Duoplasmatron ion source

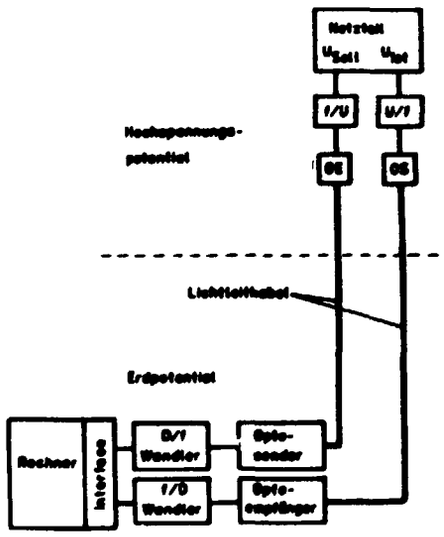

Fig. 3: Data transmission across high potential difference

The demands to the space saving construction and the high efficiency are principle fulfilled by switch made power supplies. Commercial devices fulfilling the demanded voltage, power parameters and needed control range were not available. Therefore special developments were necessary. Additional units were also developed for the data transmission crossing the high potential difference. In figure 3 an example is represented. The data word from the computer is converted into frequency by a digital to frequency converter. By the generated frequency a light emitting diode is driven. The light pulses are given into a light transmitting cuble. At the other end of the cuble an optical receiver is placed on high voltage potential and a converter transforms the frequency into a voltage.

For the electronical control of a power supply an analogue input is sufficient in the simplest case. The output signal is proportional of a fixed input voltage.
A digital input into the power supply is favourable for the rising of the precision, above all in the direct neighbourhood of the accelerator, where great parasitic voltages are generated.
An input for optical signal fulfils on the power supply unit all the demands to the highest freedom from interference and the greatest potential difference.

The message of each adjusted actual value must be effected to the computer for control, supervision and record. A directly display of the actual value is favourable for the operator. Therefore various outputs are possible. They are in this succession:

- analogue output in the low voltage range 0 - 5 V or 0 - 10 V proportional to the actual value
- digital output
- frequency output
- optical output.

The power supply units for the cascade generator can be decided into two groups in proportion to the demanded output voltage:

1. low voltage $<$ 2 kV
2. high voltage $>$ 2 kV.

The known circuit technique of the switch mode power supplies can be applied for the first group of the power supply units. For the voltage range over 2 kV we must carry out special developments [2] . Through new circuit techniques could be attained the following parameters:

Output voltage	1 - 10 kV variable
Input voltage	220 V, 50 Hz
Output power	100 W (300 W)

Efficiency	> 70 %
Stability of the output voltage	1 ‰
Noise of the output voltage	1 ‰
Volume of the power supply unit	120 x 215 x 220 mm^3 (EGS plug in unit)

This power supply units are produced presently in small series. The technique of solution allows a relative free movement variation of the output parameter adequate to the demands. A parallel or series connection of some power supplies is possible to increase the output power.
In present works are running to develop power supply units to attain an output voltage of 50 kV and an output power more than 1 kW.

References:

/1/ F. Gleisberg, W. Enghardt, W. Meiling: Contribution to automation of a cascade Generator using a microcomputer, ZfK-410, 1980, 167

/2/ G. Jacob: Diplomarbeit, Technische Universität Dresden, Sektion Physik 1981

A PERSONAL COMPUTER BASED ION BEAM SHAPE MEASURING SET-UP

T. Sztaricskai, L. Nyitrai and I. Berkes

Institute of Experimental Physics, Koesuth University, Debrecen, Hungary

A personal computer based ion beam measuring set-up using an 8x8 electrode ion current probe has been developed. The measured current data are multiplexed on the data bus of a Z 80 based ABC-80 personal computer. The use of the computer makes possible easy evaluation of current data for the determination of ion optical parameters in a duoplasmatron einzel-lens ion source system.

Introduction

The commonly used moving electrode ion beam monitors of the accelerator technique[1,2] give a low accuracy measuring possibility for the investigation of the shape at low energy high current ion beams. The beam profile indicators with matrix geometry [3,4] make possible the more accurate measurements but the optical evaluation is too difficult [5]. The uniformity investigations [6,7] on large volume magnetic multipole ion sources, based or matrix arranged probes analogue multiplexer and analogue or/and digital storage oscilloscopes, make possibility for the visualisation of beam shape of the sources. The use of digital storage oscilloscope [8] in at the uniformity measurements makes easier the evaluation of the data and the determination of the beam shape using a compatible computer.

The matrix electrodes ion beam probe

The constructed matrix electrodes ion beam probe serves for the study of spatial distribution of ion beams in a low energy accelerator under construction. In order to obtain the necessary data for a directly observable map, an 8x8 electrodes matrix probe was used. The probe consists of titanium diaphragm and suppressor electrode with matrix arranged holes on them and in an insulator spaced current probes which terminate the ion beam generated in the ion source. The probe separation is 5 mm. To obtain the needed information along the beam, the probe can be moved in a range of 50 cm along the geometrical axis of the beam.

The currents of the impigning ion beam on the probes are analogue multiplexed on the input of the ADC. A Systrom-Donner model 7205 digital multimeter has been used as ADC. The BCD outputs of the multimeter are coupled on the data bus of the ABC-80 personal computer. The measured current data have been stored in the 128 Byte POKE field of the ABC-80.

The measuring system

The block diagram of the system is shown in Fig.1. It consists of the multielectrode beam probe, an 64 input analogue multiplexer, the DMM as ADC, an interface coupling the measured data on the personal computer and the ABC-80 itself.

The ABC-80, produced in a LUXOR-BRG cooperation, in a basic arrangement has a TV receiver as display and a twin casette system for data storage. The ABC-80 is a Z-80 based system with 16 kByte of ROM /BASIC interpreter, programs for graphical display, ect./, 16 kByte of RAM and an 128 Byte extra memory /POKE/ for the direct data storage not cleared with the RAM [9].

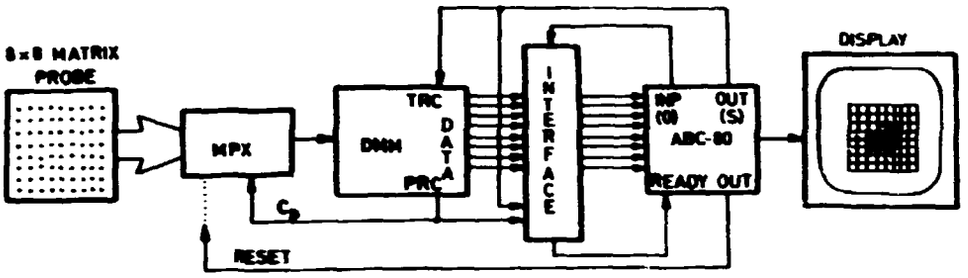

Fig. 1. The block diagram of the ion beam shape measuring st-up.

The use of the model 7205 DMM as ADC makes the measurement a little bit slow. The measuring cycle of the DMM is about 0,25 s [10] , so the measurement of the current distribution in the beam takes about 16 seconds. Using the DMM, an electrode by electrode direct manual measurement on the beam is possible. The analogue multiplexer shows the position of the measured electrode in the matrix.

The syncronisation of the ABC-80 with the DMM is made by the interface. The interface controls the operation of the ABC-80 by the RDY /Z-80's WAIT/ input and couples the DMM's BCD output lines to the parallel data input. The pulse from the INP/O/ output of the ABC-80 generates a transfer command in the interface for the DMM output and the DMM PRINT COMMAND gives the handshake pulse at the end of the DMM measuring cycle at the given electrode. The handshake pulse switches the analogue multiplexer on the next electrode and activates by the ABC-80 by the RDY. The ABC 80 reads in the current from the electrode and generates the next INP/O/ signal. After the 64 cycles the ABC-80 closes the data bus and allows to read the evaluation programmes from the casette.

<u>The used programmes</u>

The used programmes [11] were written in BASIC. More short programmes have been developed for the measurements and data evaluation. The mostly used programmes are:

1./ "GRAFI": a programme for graphical display of the position of electrodes on the TV screen

2./ "MICRO-1": Data collection programme

3./ "MICRO-2": Data evaluation programme for the
- Display of current data on the electrodes position
- Determination of: I_{max}, I_{min}, $I_{average}$, $I_{/1-e^{-1}/}$
- Determination of the electrodes location for I_{min} I I_{max} in ten ranges
- Display of electrode position in the above ranges /visualization of the beam shape/

Some new programmes are under developement for the fast determination of beam divergence, emittance values on the basis of the measured current data and the operation parameters of the DP-30 ion source einzel-lens system [12] .

References

1./ National Electrostatic Co.: BPM 5-20 Beam Profile Monitors Manual, New York, 1974

2./ J Takács:IEEE Trans. Nucl.Sci. NS-12 /1965/ No.3,980

3./ M Kiver, A Yokosawa: Rew.Scint.Instr. 33 /1962/ 746

4./ C R Emigh: in Proc.Symp.on Ion Sources and Beam Formation, BNL 50310, 1971

5./ S Ejima, A Nowinski, T Marshall: Rev.Sci.Instr. 45 /1974/ 57

6./ B Singh: Ph.D. Dissertation, Aston University, Birmingham, 1979

7./ A P H Goede et al: Measurements on Large Volume Magnetic Multipole Ion Sources, Culham Lab., to be published

8./ NICOLET Inst, Co.: Manual of Digital Oscilloscope Model 206

9./ LUXOR Co., Stockholm: ABC-80 Users Manual, 1979

10./ SYSTRON-DONNER Co.: Model 7205 DMM's manual

11./ L Nyitrai : Diploma work Kossuth University, Debrecen, 198o

12./ High Voltage Engineering Co.: DP-30 Duoplasmatron and Einzel-Lens, Manual

СИСТЕМА УПРАВЛЕНИЯ С РАСПРЕДЕЛЕННОЙ ИНТЕЛЛЕКТУАЛЬНОСТЬЮ (СУРИ)

З. Хикманн, Р. Фолле
Центральный институт ядерных исследований АН ГДР, Россендорф

I. Введение

Развитие техники физического эксперимента предъявляет повышенные требования к стабилизации условий эксперимента, одним из которых является вектор пучка. По этой причине возникла задача по созданию системы управления, которая контролирует весь процесс, начинающийся от режима ускорения и кончающийся интерпретацией физических результатов.

Такая система управления /I/ должна иметь: онлайн-связь с большой ЭВМ для обработки физических данных и систему с распределенной интеллектуальностью. Эффективность подобной системы зависит также от формы связи ЧЕЛОВЕК - ЭВМ, которая должна учитывать психологические аспекты. Ниже представлены результаты, полученные нами при решении указанной проблемы.

2. Система управления

Существенными преимуществами СУРИ являются:

- возможность изменения структуры в процессе работы;
- увеличенная вычислительная мощность и, как следствие, повышенная быстрота реакции на события в системе;
- возможность автоматической диагностики;
- повышенная надежность из-за автономной работы отдельных подсистем в случае выхода из строя или отказа одной из них.

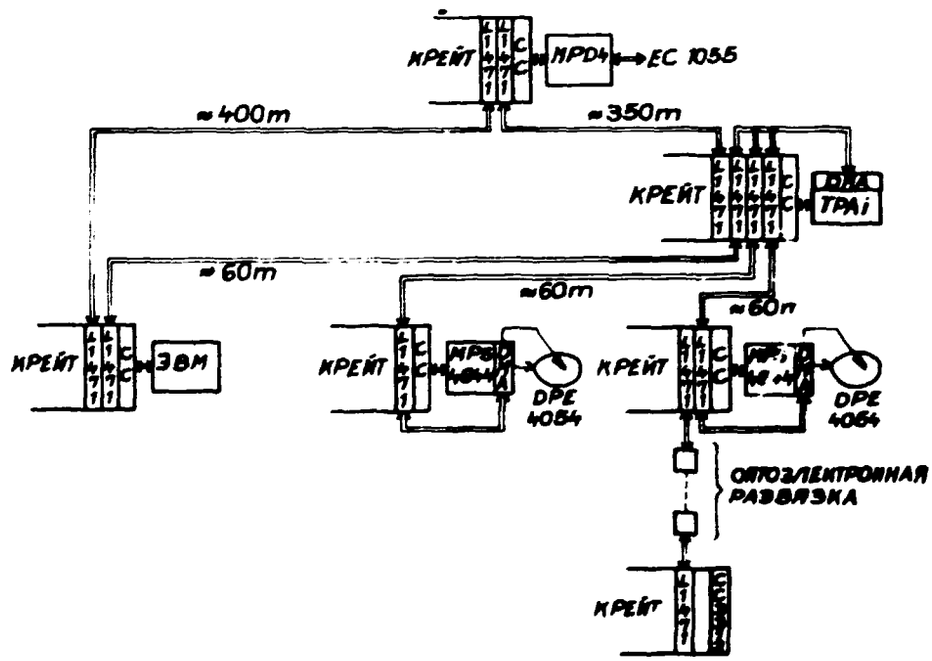

Рис. I
Система управления с распределенной интеллектуальностью

В зависимости от профиля решаемой задачи в отдельных подсистемах используются ЭВМ различного типа. Соблюдение требований по стандартизации и модульности при создании системы реализуется применением стандарта КАМАК.

Специфика задачи автоматизации на ускорителях требует три типа специальных системных модулей:

- ЭВМ связаны между собой через LINK - модули КАМАК /2/, находящиеся в крейте КАМАК каждой ЭВМ, так как максимальное расстояние между точками связи один километр. Информация через LINK - модули передается последовательно со скоростью $2 \cdot 10^5$ байт/сек.
- Для управления удаленными крейтами от ЭВМ в этих крейтах используется специальный крейт-контроллер /3/, причем связь ЭВМ с удаленным крейтом производится через LINK - модули. Контроллер удаленного крейта может работать совместно с интеллектуальными КАМАК модулями в данном крейте с помощью вспомогательной магистрали (ACB - магистраль)
- Удаленные крейты могут находится под напряжением в несколько сот киловольт. Поэтому в линиях связи с ними стоят оптоэлектронные развязки /4/, скорость передачи через которые составляет 10^5 байт/сек.

3. Связь ЧЕЛОВЕК - ЭВМ

Эффективность взаимодействия человека с ЭВМ определяется степенью их взаимной приспособленности друг к другу, которая, в свою очередь, зависит от таких качеств человека, как опыт, восприимчивость и т.п., т.е. в конечном счете от физиологических возможностей человека /5/. Процесс приспособления происходит путем последовательного согласования требований со стороны человека и от ЭВМ.

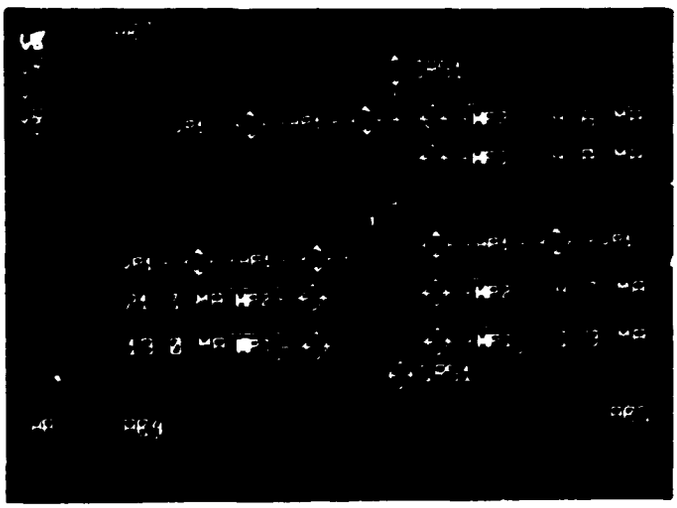

Рис. 2
Изображение на дисплее

Применение дисплейной техники приводит в данном случае к желаемому эффекту. Обрабатываемая информация разбивается функционально и высвечивается операторуу в виде статического изображения, что позволяет удобно пользоваться этой информацией.

Отказы в работе установки вызывают стрессовое состояние оператора, для уменьшения которого и получения целесообразной реакции оператора система автоматически передает оператору указания и советы. По нашему опыту приспособление оператора к ЭВМ происходит с большим трудом. Эту процедуру можно облегчить с помощью индивидуальной творческой деятельности.

4. Операционная система для СУРИ

Операционная система для СУРИ должна удовлетворять следующими существенными критериями:

- каждая ЭВМ должна уметь работать автономно;
- все ЭВМ в системе должны быть равноправны.

Наличие указанных выше критериев исключает центральную операционную систему. Операционная система для каждой ЭВМ может быть как стандартная (приобретенная вместе с ЭВМ), так и написанная самими пользователями /6/. Передачами через модули LINK управляет LINK-handler. Один из вариантов LINK-handler'a между ЭВМ TPA_1 и микропроцессором MPB - 4944 находится в настоящее время в эксплуатации /7/.

Литература

/1/ S. Hiekmann, R. Fülle; ZfK - 433 (1981), vol. I, S. 25

/2/ F. Weidhase et. al.; Tu-Informationen 05-28-78 (1978), Dresden

/3/ J. Pöthig; Dipl.-Arb., TU Dresden, Sektion V, (1979)

/4/ F. Weidhase, E. Kreuzer; Wirtschaftspatent WF-H 03F 219544 v. 10.3.1980

/5/ W Hacker; Allgemeine Arbeits- und Ingenierpsychologie, VEB Deutscher Verlag der Wissenschaften , Berlin 1980, S. 31

/6/ W.-J- Linnemann; Vortrag, 14. Fachkolloquium "Informationstechnik", TU Dresden vom 3. bis 5.2. 1981

/7/ R. Fülle et.al.; Vortrag XI. Symposium on Interaction of Fast Neutrons with Nuclei, TU Dresden vom 30.11. bis 4.12.1981

МИНИМИЗАЦИЯ ТОКОВЫХ ПОТЕРЬ В ТРАКТЕ ЭЛЕКТРОННОГО ЦИКЛОТРОНА

З. Хикманн, В.Ю. Линнемани, Г. Пич

Центральный институт ядерных исследований АН ГДР, Россендорф

I. Введение

В настоящее время значительно увеличились мощности и сложность всевозможных промышленных и научных устновок. Вследствие этого автоматизация таких установок с привлечением ЭВМ приводит к следующим результатам: оператор установки освобождается от значительной доли физической и умственной нагрузки, что позволяет ему более глубоко вникать в процессы, происходящие в установке, повыщая тем самым свою квалификацию /I.2/.

В данной работе описывается применение алгоритма последовательной оптимизации для минимизации потерь и управления током пучка в тракте инжекции и в процессе ускорения на электронной модели изохронного циклотрона ЛЯП ОИЯИ /3,4/.

2. Принцип действия

Структурная схема системы оптимизации и управления током пучка циклотрона показана на рис. I. Из схемы видно, что ЭВМ ЕС-1010 участвует в выработке управляющего воздействия W_1, которое через регулятор R_1 влияет на управляющие параметры X_1.

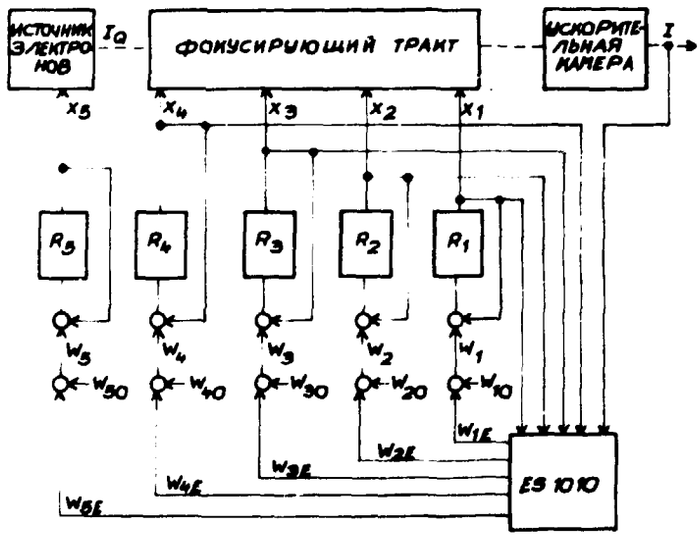

Рис. I

Структурная схема

R_i : регулируемые элементы

W_i : управляющее воздействие

W_{i0} : заданная величина

W_{iE} : изменение в заданную величину

X_i : регулируемые параметры

w_{i0} - заданная величина для соответствующего параметра, служащая для установки начального режима работы ускорителя и w_{iE} - изменение заданной величины.

В данной работе для оптимизации используются только пять параметров циклотрона (i= I,2,3,4) и для управления один (i= 5), остальные параметры остаются неизменными. Переменные i= I до 5 не зависят друг от друга.

3. Описание алгоритма

Схема алгоритма изображена на рис. 2. На схеме можно видеть протекание процесса стабилизации тока пучка на величине I_0 при его колебаниях во времени. Видно, что алгоритм имеет три различных шага процесса, включение питания и грубая подстройка тока пучка вручную ($I = I_0$), цикл оптимизации по всем четырем параметрам и коррекция величины I к значению I_0.

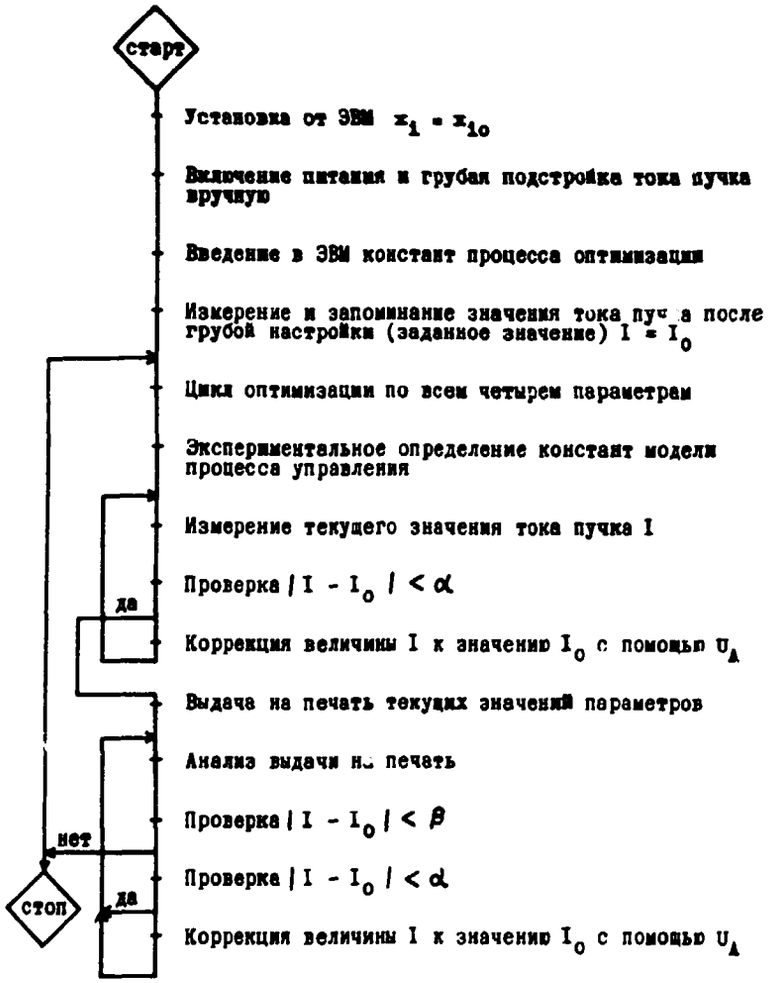

Рис. 2

Схема алгоритма

Для оптимизации по одному из параметров использовались два метода:

- движение к оптимуму с постоянным шагом. Движение к оптимуму из начальной точки по функции качества $I = f(x_i)$ происходит с постоянным шагом. Направление движения к оптимуму определяется с помощью пробного шага;
- второй метод представляет собой комбинацию градиентного метода и метода "золотого сечения".

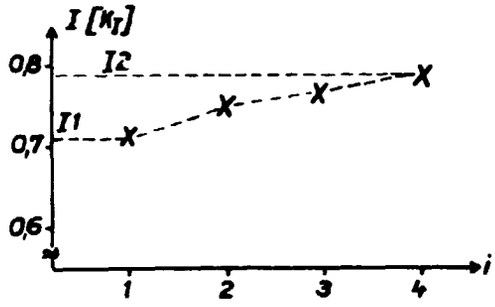

Изменение тока пучка от каждого из четырех параметров за один цикл оптимизации показано на рис. 3.

Рис. 3

Изменение тока пучка в процессе оптимизации

Стабилизация тока пучка с помощью ЭВМ, работающей по замкнутому циклу регулирования, оставляет оператору в основном функции контроля и необходимость вмешательства в отдельных случаях. Выдача информации о параметрах ускорителя на дисплей в процессе работы ЭВМ происходит непрерывно. Если же эта выдача прекращается, то это означает, что ЭВМ просит вмешательства оператора и сообщает ему последнюю информацию, на которой произошла передача управления оператору.

Алгоритм, описанный выше, реализован на языке ассемблера ЭВМ ЕС-1010. Объем памяти, занимаемый пакетом программ, ~ 6 кбайт.

4. Обсуждение результатов

- В процессе работы с системой оптимальной настройки пучка было установлено, что оптимум отыскивается за число циклов оптимизации не более трех.
- Величина оптимума, находимая с помощью ЭВМ, была на 5 - 15% выше величины оптимума, находимого оператором при ручной настройке.
- Оба выбранных метода оптимизации достаточно надежно работали, причем время поиска оптимума при использовании первого метода было несколько больше, чем при использовании второго метода.

Литература

/1/ Hacker, W.; VEB Deutscher Verlag der Wissenschaften, Berlin 1980, S. 21.

/2/ Savalova, N.D. et al.; Sowj. Wissenschaft, gesellschaft. Beiträge, Nr. 3 (1972), S. 258.

/3/ Аносов, В,Н, и др.; ОИЯИ, Р9-80-624, Дубна, 1980.

/4/ Анасов, В.Н. и др.; препринт ОИЯИ, в печати.

AUTOMATIC ENERGY VARIATION IN NUCLEAR PHYSICS EXPERIMENTS USING A COMPUTER SYSTEM WITH DISTRIBUTED INTELLIGENCE

R. Fuelle, B. Hartmann, S. Hickmann and G. Pietzsch
Academy of Sciences of the GDR, Central Institute of Nuclear Research Rossendorf

1. Introduction

In the investigation of nuclear reactions at accelerators the conditions of the measurements are mainly established by the parameters of the beam of accelerated particles. Therefore it is desirable to involve the control of beam parameters in the automation of these experiments. This should allow to increase the reliability of the experimental results and to free the physicist and the operator from a lot of manipulations. Furthermore we intend to give the operator a powerful tool for watching over the accelerator an for controlling it.

As a first stage we have realized the computer-aided automatic energy variation for the measurement of excitation functions at the Rossendorf tandem accelerator EGP-10-1.

2. The Accelerator and Computer Systems

We have solved this problem by means of a computer system with distributed intelligence. Fig. 1 shows schematically the structure of the accelerator and of the computer system.

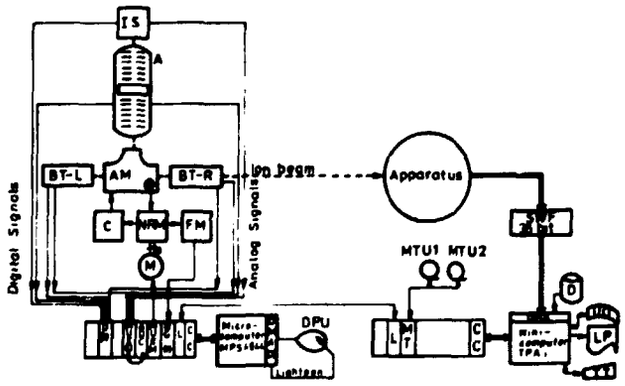

IS=ion source, A=tandem accelerator, BT=beam transport system, AM=analyzer magnet, C=control of the magnet, NMR=nuclear resonance magnetometer, FM=frequency measuring device, M=step motor, D(I)=digital input, MUX(I)=multiplexor for analog input, ADC=analog digital converter, MUX(M)=multiplexor for the step motor /1/, RG(I)=input register, L=link module/2/, CC=cate controller, DMA=direct memory access, DPU=display unit, SWP=sum-word formation, MTU=magnetic tape unit, D=disk, TT=teletype, LP=lineprinter, I/O=input and output for paper tape.

Fig. 1 Accelerator and computer systems

The microcomputer acquisites information about the mean operating parameters of the accelerator (A), of the ion source (IS) and of the beam transport system left (BTL) and right (BTR) respectively. After processing the data the microcomputer presents they on a display, connected with the microcomputer via a DMA-channel. As process peripherials we are using a CAMAC-instrumentation. Its configuration is shown in fig. 1.

For the automatic energy variation we utilize the already existent control circuits of the magnetic field stabilisation based on a NMR-magnetometer. The microcomputer controls the desired value of the frequency in the stabilisation circuit and thus the desired value of the magnetic field by adjusting the input voltage of a capacity diode. An other circuit controls the high voltage using the magnetic field as an energy reference.

The microcomputer is coupled with a minicomputer TPAi by means of CAMAC-link modules type 1470, which allow to realise a fast bidirectional information exchange, independently of the computer type /2/. The minicomputer performs the acquisition and preprocessing of physical data. For the fast data input it is attached with a special data channel and a 36 bit sum-word formation unit.

3. The Algorithm of the Energy Variation

As shown in fig. 2 the microcomputer performs the acquisition and presentation of accelerator operating data as a background task. On a request of the minicomputer TPAi it interrupts this task and prepares the reception of the next frequency value to be adjusted. After getting the new desired value the microcomputer adjusts it and sends the actual frequency value to the minicomputer. After receiving this value the measurement and the acquisition of physical data are started again.

The desired frequency values are to put in by the physicist before each measurement or before the start of a series of measurements similar to an ALGOL-for-statement, containing the values of the start and end frequency as well as of the frequency step.

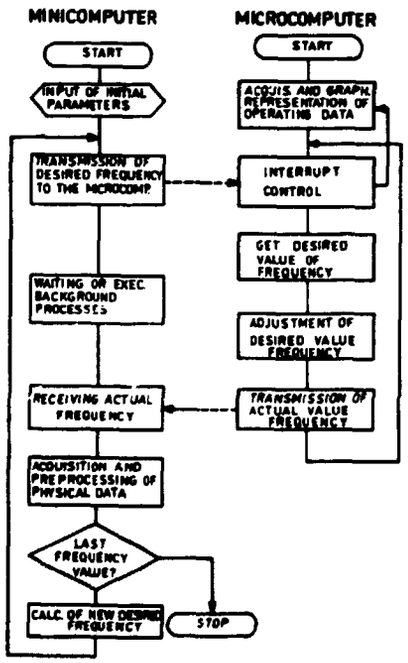

Fig. 2 Algorithm of the energy variation

4. The Communication between the Computers

The CAMAC-link modules used for the information exchange between the computers allow to transmit data with a maximum speed of 10^5 data words (16 bit) per second. The data are transmitted in blocks of 256 bytes at most. The block-transmission is controlled by a hand-shake exchanging control data (label, block length) and interrupt signals (S1=LAM 2, S2=LAM 3) as shown in fig. 3 for the faultless case of the data transfer.

The transmitting computer initializes the data exchange by sending S1 as a request signal. After confirming the readiness by the receiving computer a

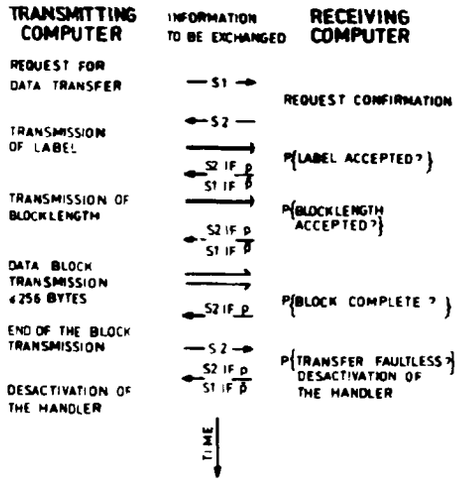

label is transmitted, which contains the information about (numbers of) the sending and the receiving tasks. If the the label has been accepted by replaying with the signal S2, the length of the data block (number of bytes in the block) is told. After confirming it by the receiver, the blocktransmission is executed. The transmitting computer tells the end of the block transmission by sending the signal S2. After the data block has been received completely and if the transfer has been carried out faultlessly the data transmission is finished and acknowledged by a signal S2. In the other case the transfer is to be repeated.

Fig. 3 Hand-shake in the data transmission by the link modules

5. The Programs

The energy variation has been realized by a minimum of programming expense. In the microcomputer two programs are implemented, one for the acquisition and graphical representation of accelerator operating data and an other one for the energy variation. The tasks are synchronized by a simple control program comprising an interrupt handler and a link handler.

The minicomputer program for the energy variation is implemented as a module. It can be set into any experiment program, if certain conventions concerning the software interfaces are regarded. The program module performes the following processes:

- input of the frequency values, communication with the user,
- preparation of the data for the microcomputer,
- control of the data transmission,
- storing of the actual computer parameters and
- automatic roll-in of the next program.

The module is running under the TPAI disk monitor system, which supports the communication with the other experiment program modules via a special data field and the program roll-in and roll-out.

6. Application and Further Development

The equipments and the programs for the energy variation have been successfully applicated in the measurement of excitation functions for the reaction ^{58}Ni (p, p')^{58}Ni. Two series of measurements with 200 values have been performed.

At present an advanced version of the link handler, which is running under the control of a realtime system (RTSi), is beeing worked out and tested. The new program version permits to put in the desired energy values and carries out the convertion into the correspending frequency values.

References

/1/ H. Borkenhagen, Report ZfK-443 (1980),169
/2/ F. Weidhase et al., TU Information, 05-28-78, Dresden, 1978

MULTI-TELESCOPE SYSTEM FOR INVESTIGATING THE (N,P) REACTIONS

A.Korman, B.Marjański, J.Rondio

Institute of Nuclear Research, Warsaw (Poland)

The eight-telescope system for measuring the energy and angular distribution of protons from the (n,p) reactions in the energy range 2.5 - 20 MeV was described. The system was tested using 19 MeV neutrons.

1. Introduction

The present paper describes an eight-telescope system for investigating neutron induced reactions. When constructing the telescope special attention was paid to the possibility of measuring the protons in the energy range up to 20 MeV.

2. General

The operation of each telescope is based on tripple coincidences between proportional counters PC1, PC2 and one silicon detector SD.

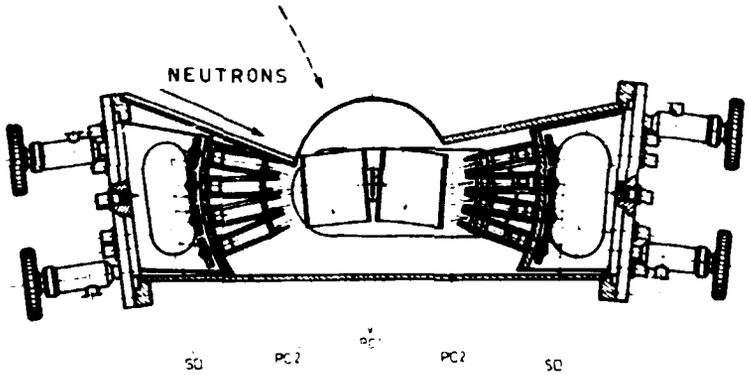

Fig.1. Multitelescope chamber:
T-target, PC1-"target" proportional counters,
PC2 - $\frac{dE}{dx}$ proportional counters,
SD - silicon detectors (E-counters)

The PC1 counter is common for a group of four telescopes and sends the message that the particle is emitted from the target. The PC2 counters serve as $\frac{dE}{dx}$ counters. Lithium-drifted silicon detectors SD are used as E counters. The whole chamber is filled with pure CO_2 under the pressure of 80 mm Hg.

Having such an equipment one can measure simultaneously eight energy spectra at eight different angles-four at forward and four at backward angles. The angular distance between the neighbouring telescopes in each of the group of four telescopes, is 10° so it is possible to measure angular distribution in the range 10°-160° with a 10^ostep, at two experimental positions of the chamber. The associated electronics is based upon a standard slow-fast coincidence system. Two-dimensional analysis was used to identify the charged particles.

3. Time resolution of the telescope

Special attention was paid to establishing the optimum time resolution of the telescope. The time relations were measured between any pair of the counters using a time-to-amplitude converter.

For this purpose protons from the reactions $^{12}C(^3He,p)^{14}N$ and $^2D(^3He,p)^4He$

were used.

The energies of those protons were: 2.6, 4.3 and 6.3 and 16 MeV, respectively. The time distribution between SD and PC2 is shown in Fig.2.

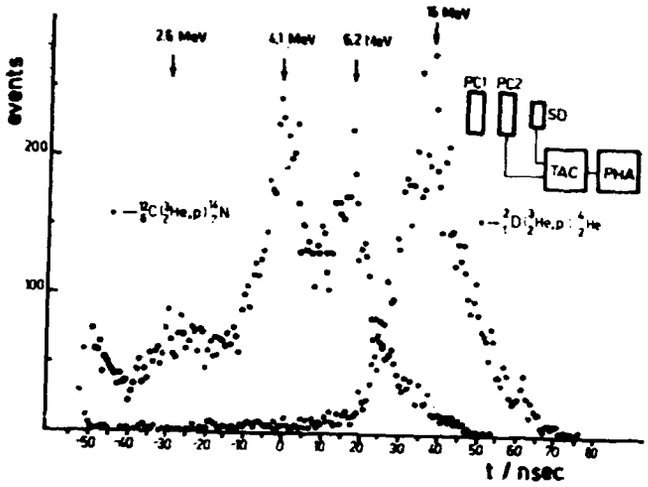

Fig.2. Time distribution between $\frac{dE}{dx}$ (PC2) and E (SD) counters, measured for protons from the $^{12}C(^3He,p)^{14}N$ and $^2H(^3He,p)^4He$ reactions. The pulses from the SD counter were fed to the start input of the T.A.C.

The peaks in the spectrum correspond to protons of the given energy. The time distribution for those counters is contained within the time interval of 120 nsec. For SD-PC1 and PC1-PC2 that interval is alike and equals 70 nsec. Thus the special tripple coincidence unit was designed with different coincidence resolving times, for different pairs of inputs: and so 140 nsec between pulses from proportional counters and 220 nsec between pulses from proportionalcounters and Si (Li) detectors.

The efficiency of the coincidence unit was thoroughly tested. The proton spectrum was measured for the $(^3He,p)$ reaction on natural boron: the spectrum was simultaneously gated in two ways. In the first case the spectrum was gated by the tripple coincidence unit of the telescope and in the second one by double coincidences between the E and ΔE pulses where the resolving time was much larger (2 usec). The latter spectrum was used instead of the simple proton spectrum to eliminate the background. By comparing these two spectra we found that the coincidence efficiency is better than 99% for the whole measured energy spectrum. The proton spectrum used covers the energy range of 2.5 to 20 MeV.

4. Test of the telescope in two-dimensional analysis

The final test of the eight-telescope system was performed using 19 MeV neutrons from the $^3T(d,n)^4He$ reaction induced by 2.5 MeV deuterons from the Van de Graaff accelerator. The two dimensional spectrum shown in Fig.3 was obtained by bombarding a deuterated polyethylene target with 19 MeV neutrons. There are two separate hyperbolas for the recoil protons and deuterons. As it is seen, two-dimensional analysis enables separation of particles of different kinds. Random coincidence events are clustered in the corner of the picture. The telescope system, designed for investigation of the energy and

angular distributions of protons from the (n,p) reactions, can be used, after slight adjustment, to investigate other charged particles from neutron induced reactions.

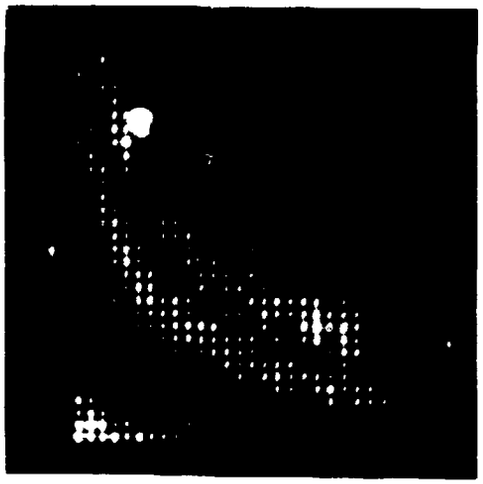

Fig.3. Two-dimensional spectrum of the recoil protons and deuterons from the deuterated polyethylene target irradiated with 19 MeV neutrons.

References

[1] R.N.Glover, K.H.Purser and E.Weigold, Nucl.Instr.and Meth. 10 (1961) 343

[2] M.Brendle, M.Mörike, G.Staudt and G.Steidle, Nucl.Instr.and Meth. 81 (1970 141

[3] H.Vonach, Proc. 2nd Int.Symp. on Neutron-induced reactions, Smolenice 1979

[4] C.Derndorfer, R.Fischer, P.Hille, G.Stengl and H.Vonach, Nucl.Instr.and Meth. 187 (1981) 423

Новые методы измерения излучения в дозиметрии нейтронных-гамма-полей

Б. Дёршель, Г.Претш, Г. Штройбель

(Технический университет Дрездена, Секция физики) I)

I. Введение

Используемые до сих пор методы дозиметрии в целях радиационной безопасности основываются в большинстве случаев на применении активирующих зондов, трековых детекторов и кремниевых диодов для измерения нейтронов или на применении пленочных детекторов и ионизационных камер конденсаторного типа для измерения гамма-излучения.

В нейтронной дозиметрии используются кроме того дозиметры альбедо на основе термолюминесцентных или трековых детекторов.

Все эти методы имеют в большей или меньшей степени большие недостатки, состоящие, например, в выраженной зависимости от энергии и направления показания детектора, в недостаточном диапазоне измерения или в мешающей чувствительности по сравнению с другими видами излучения.Поэтому необходимые предварительные обработки перед проведением оценки, например, травление трековых детекторов или тепловая или оптическая стимуляция люминесцентных детекторов, могут быть отрицательными. Дальнейшее развитие дозиметрии будет развиваться, следовательно, по двум направлениям: с одной стороны, работают над улучшением известных методов измерения, с другой стороны, предпринимаются также большие усилия в разработке новых методов измерений излучений, в особенности на основе твердотельных детекторов. Основой для этого является использование новых радиационных эффектов в твердых телах, которые ведут к макроскопически измеряемым изменениям качеств детекторов.

2. Измерение нейтронов с помощью тонкопленочных конденсаторов

Для измерения нейтронов многообещающими являются тонкопленочные конденсаторы. Они состоят из структуры MOS , например, $Si-SiO_2-Al$, к которым во время облучения подается напряжение прибл. 30 ... I20 В. В Техническом университете в Дрездене начали разработку таких детекторов. На рисунке I показано принципиальное устройство детекторов.

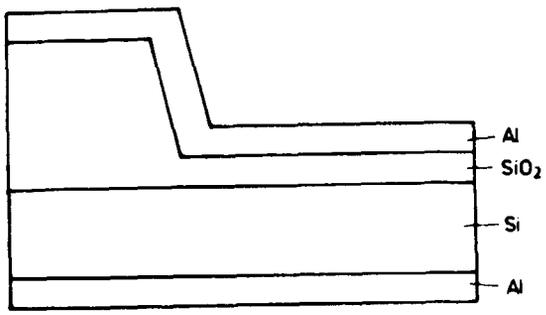

Рис. I Схема тонкопленочного конденсатора для измерения нейтронов

---

1) [illegible] Дрезден, Помпеюштр. 13

Субстрат состоит из n -кремния, на котором из-за теплового окисления был выработан слой изолятора из SiO_2 толщиной в 60 ... 100 нм. Действующий в качестве противоположного электрода алюминиевый слой напыляется и имеет толщину прибл. 50 нм. Над этой MOS-структурой располагается радиатор из делящегося вещества, например, урана. При воздействии нейтронов в радиаторе вырабатываются осколки деления, проникающие в слой изолятора. На основе сильного воздействия ионизации и выделенных вследствие этого носителей заряда происходит сильное локальное снижение продольной напряженности поля. Если электродами во время облучения создается напряжение, то на местах пробегов осколков деления происходят искровые пробои.

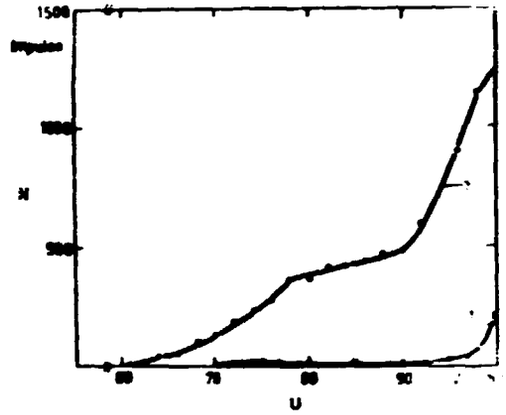

Рис. 2 Характеристика пробоя тонкопленочного конденсатора без (1) и с облучением (2)

На рисунке 2 изображена характеристика пробоя тонкопленочного конденсатора, облученного осколками деления уранового радиатора. При превышении пробивного напряжения происходят пробои и без облучения, количество которых очень сильно увеличивается с возрастанием напряжения. Так как однако индуцированные радиацией пробои наступают при низких напряжениях, возможно однозначное разделение от фона. На рисунке 3 изображена кривая калибровки такого тонкопленочного конденсатора, т.е. зарегистрированное количество искровых пробоев на замедляющий элемент при определенном напряжении в зависимости от плотности нейтронного потока. Измерения производились в нейтронном поле учебного реактора в Техническом университете в Дрездене.

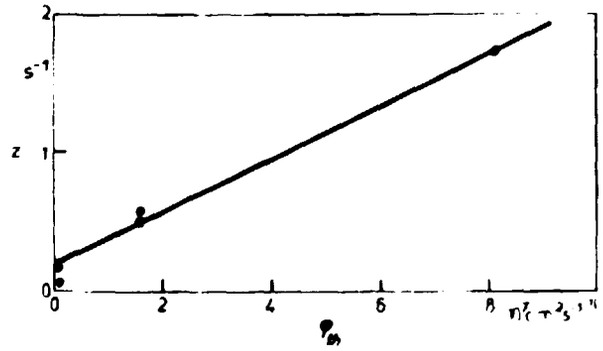

Рис. 3 Градуировочная кривая тонкопленочного конденсатора для измерения нейтронов

Благодаря изменению свойств радиатора возможна изменчивость в отношении регистрируемого энергетического диапазона нейтронов и необходимого диапазона измерения. Этот метод пригоден особенно для регистрации высоких плотностей потока нейтронов. При каждом искровом пробое испаряется на соответствующем месте алюминиевый противоположный электрод, так что количество испаренных алюминиевых зон является прямым интегральным критерием нейтронного флюэнса или нейтронной дозы.

Рисунок 4 показывает микроснимок таких зон испарения. Так как детекторы совершенно нечувствительные по отношению к гамма-излучению, они особенно пригодны для аварийной дозиметрии в смешанных нейтронно-гамма-полях. Благодаря комбинации многих детекторов с различной чувствительностью и энергетической зависимостью можно реализовать при надлежащей микроэлектронной оценке требуемые дозиметрические свойства.

Рис. 4 Микроснимка испаренных алюминиевых зон

3. Измерение гамма-излучения с помощью электретных детекторов

Очень многообещающими являются также методы радиационного определения, основывающиеся на изменении состояния заряда электретов. Пригодными для этого являются, например, термоэлектреты с хорошей продолжительной стабильностью в течение многих лет и поверхностной плотностью заряда от 10^{-9} до 10^{-8} С/см^2. При использовании подобных электретов можно реализовать конфигурации для определения гамма-излучения, которые основаны на принципе ионизационных камер.

Выработанные при радиационном воздействии в объеме воздуха над электретами ионы перемещаются соответственно их знаку к поверхности электретов и компенсируют часть поверхностного заряда. Изменение поверхностного заряда подлежит измерению и пропорционально гамма-дозе в диапазоне многих порядков величин. Чувствительность нейтронов таких электретных ионизационных камер чрезвычайно низка, так что они хорошо подходят особенно для гамма-дозиметрии в смешанных нейтронно-гамма-полях.

Также и по этому вопросу в Техническом университете Дрездена были начаты первые исследования. Электреты вырабатываются вследствие нагревания тефлоновых дисков при одновременном воздействии сильного электрического поля.

Рисунок 5 показывает необходимый для этого временной ход температуры и напряженности электрического поля. Температура сначала повышается линейно до 260°С. Затем включается электрическое поле в 72 кВ/см, причем температура сохраняется для 60 мин постоянной. Охлаждение производится также под действием электрического поля, причем выверенные диполя в электретах "замораживаются".

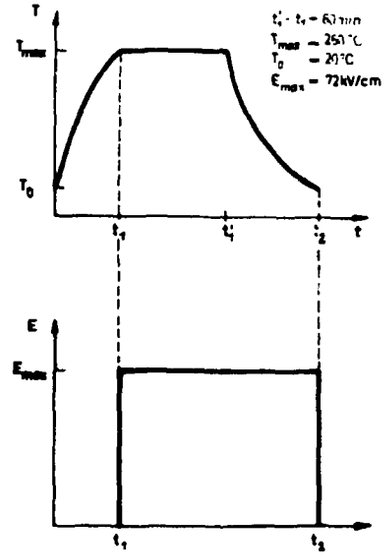

Рис. 5 Ход температуры и поля при создании термоэлектретов

Для измерения поверхностной зарядки изображенная на рисунке 6 схема.

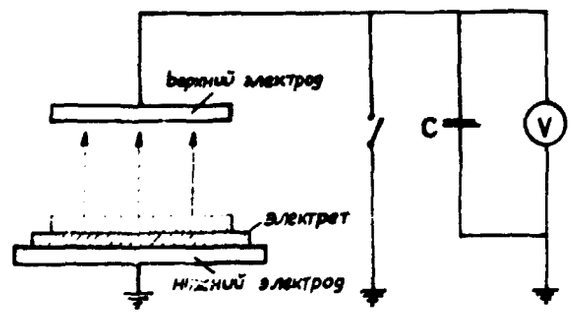

Рис. 6 Устройство для измерения поверхностной зарядки

Рисунок 7 показывает кривую калибровки электретных детекторов, которые были облучены Co-60 гамма-излучением в условиях на открытом воздухе. Из этого вытекает, что измерять можно чрезвычайно низкие гамма-дозы, так что этот метод хорошо пригоден для нормального рутинного контроля лиц, профессионально подверженных облучению. Дозиметры могут быть изготовлены в форме существующих уже до сих пор обычных дозиметров-карандашей. По сравнению с этими карманными ионизационными камерами здесь имеется в особенности одно преимущество

хорошей длительной устойчивости, так как в течение очень долгого времени практически не наступает никакого саморазряда.

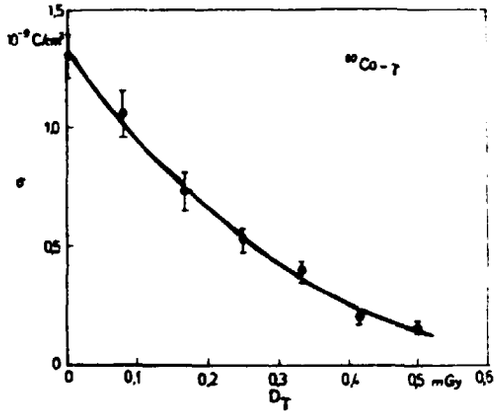

Рис. 7 Калибровочная кривая электретного детектора для измерения гамма-излучения

4. Выводы

Названные примеры показывают, что благодаря использованию новых эффектов в твердых телах возможна разработка методов радиационного определения, при которых можно избежать различных недостатков существующих до сих пор методов измерения. Насколько вообще существует преимущество этих методов по сравнению с уже имеющимися методами в рутинной и аварийной дозиметрии в смешанных нейтронно-гамма-полях покажут дальнейшие исследования.

ИЗУЧЕНИЕ РЕАКЦИИ $(n,n'\gamma)$ НА ЯДРАХ ^{232}ТН ПРИ ЭНЕРГИИ НЕЙТРОНОВ 3 МЭВ

М.В.Блинов, Б.Д.Сциборский, А.А.Филатенков, Б.М.Ширяев

Радиевый институт им. В.Г.Хлопина, Ленинград, СССР

Аннотация

Измерены спектры γ-излучения, возникающего при неупругом рассеянии нейтронов ядрами ^{232}Th. Получены парциальные сечения неупругого рассеяния для 19 уровней. При вычислении сечений учтена заселяемость уровней γ-переходами из вышележащих состояний.

Введение

Реакция $(n,n'\gamma)$ широко используется для определения сечений возбуждения нейтронами дискретных состояний ядер. На основе анализа этих данных и данных, полученных из прямых нейтронных измерений, в последние годы было показано, что при неупругом рассеянии нейтронов с энергией 2 - 3 МэВ вклад прямых процессов в возбуждение низколежащих состояний может оказаться существенным. Эти результаты получены, в основном, для деформированных ядер редкоземельной области. Область деформированных актинидов экспериментально исследована значительно слабее. По современным представлениям на величину сечения неупругого рассеяния нейтронов на делящихся ядрах оказывает влияние как форма ядра /1/, так и конкуренция со стороны процессов деления и испускания γ-квантов /2/. Заметное воздействие, которое оказывает неупругое рассеяние на формирование нейтронного спектра в реакторах на быстрых нейтронах, обусловило и практическую потребность в измерении сечения реакции.

Измерения

Измерения проводились на нейтронном генераторе НГ-400, который вырабатывал импульсы длительностью 3 - 5 нс на половине высоты с частотой повторения 1 МГц. Геометрия эксперимента приведена на рис. 1. Дейтроны, ускоренные до энергии 320 кэВ, с помощью реакции $(d + D)$ в "толстой" дейтеротитановой мишени генерировали поток нейтронов. На расстоянии 4 - 5 см от мишени помещались исследуемые образцы, изготовленные в виде металлических цилиндров диаметром 2,2 см и высотой 2,7 см. γ-излучение регистрировалось Ge(Li) детектором, который был заключен в защиту из свинца и водородосодержащих материалов с добавками бора и располагался на расстоянии 65 см от образца под углом 125° к направлению падающего потока нейтронов. Существенное, более чем на два порядка, снижение ре-

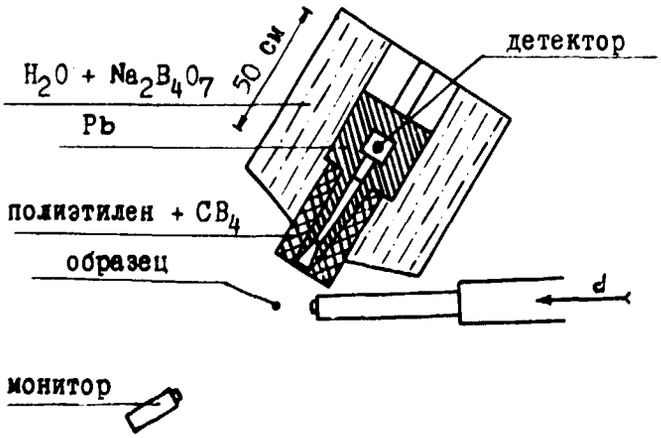

Рис. 1. Схема эксперимента

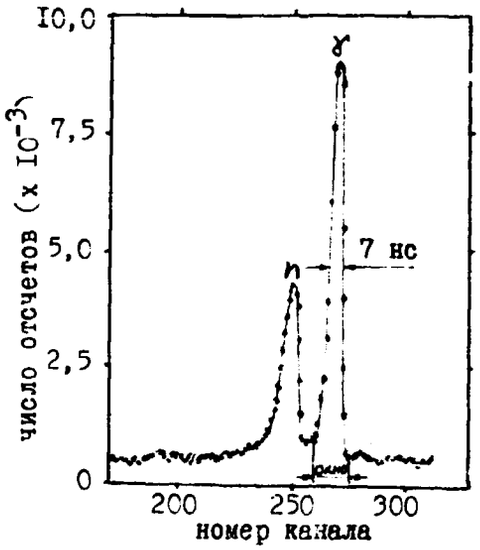

Рис. 2. Временной спектр импульсов Ge(Li) детектора. Ширина "окна" 20 нс.

гистрации фонового излучения достигалось использованием техники времени пролета. На рис.2 приведено распределение во времени импульсов Ge(Li) детектора.

Сечения возбуждения дискретных γ-линий в спектре определялось относительно сечения возбуждения γ-перехода 846,8 кэВ в ^{56}Fe согласно рекомендациям работы /3/. Поток нейтронов в сериях мониторировался с помощью сцинтилляционного счетчика, при этом также по времени пролета выбирались импульсы в соответствующем временном "окне".

Калибровка спектрометра по энергии и эффективности осуществлялась с помощью источника ^{226}Ra и образцовых стандартных γ-источников ОСГИ, которые на время калибровок помещались на место рассеивателя.

Поправки на ослабление потока нейтронов и γ-квантов в образце рассчитывались по программе, использующей метод Монте-Карло /4/. При определении пространственно-энергетического распределения нейтронов учитывались изменение энергии дейтронов при торможении в мишени, зависимость энергии нейтронов от угла вылета из мишени, неточечность источника нейтронов, а также реакции деления, захвата, упругого и неупругого рассеяния, происходящие в образце. Корректность вводимых поправок проверялась в экспериментах, в которых на место цилиндра помещалась пластинка из того же материала толщиной 1,5 мм, повернутая под углом 45^0 к направлению пучка нейтронов.

Результаты и обсуждение

Полученные γ-спектры обрабатывались на ЭВМ по программе ПРОСПЕКТ /5/. В результате были определены энергии и сечения возбуждения 90 γ-переходов, многие из которых были обнаружены впервые. Все наиболее интенсивные γ-переходы хорошо разместились между принятыми уровнями ^{232}Th /6/. Для более полной расшифровки спектра нами использовались также данные о схеме распада из работ /7 - 9/.

После введения поправок на внутреннюю конверсию были получены парциальные сечения неупругого рассеяния нейтронов для большинства уровней от 333 до 1183 кэВ. Эти данные содержатся в первой колонке таблицы. Для уровней, заселяющихся и разряжающихся четко выделяемыми интенсивными γ-переходами, погрешность представленных данных составляет 8 - 12%. В более сложных случаях заселения и распада состояний погрешность возрастает до 20 - 40%.

В настоящее время нет опубликованных данных о парциальных сечениях неупругого рассеяния нейтронов для большинства уровней ^{232}Th при энергии нейтронов выше 2 МэВ. Наиболее далеко по энергии продвинулись в работе /7/, где использовалась $(n,n'\gamma)$ методика. В этой работе было обнаружено, что для многих уров-

ней экспериментальные результаты хорошо согласуются с результатами статистических расчетов в припороговой области, но с увеличением энергии нейтронов экспериментальные сечения спадают гораздо медленнее расчетных. На этом основании авторы работы /7/ высказывают предположение о возможном вкладе прямых процессов.

Полученные нами данные, приведенные в первой колонке таблицы, удовлетворительно согласуются с проэкстраполированными результатами работы /7/ и в несколько раз превышают результаты расчетов, использующих формализм Лаузера-Фешбаха. Однако прежде чем переходить к обсуждению роли прямых процессов, необходимо учесть еще одну возможность возникновения обнаруженных эффектов.

Данные о сечениях неупругого рассеяния нейтронов в нашей работе, как и в работе /7/, получены косвенно, с использованием схем распада возбужденных состояний, которые, очевидно, неполны при энергиях возбуждения выше I,2 МэВ. В таких условиях определяемый уровень может заселяться неучтенными γ-переходами из неизвестных вышележащих состояний, что в конечном итоге будет приводить к завышению полученных сечений. Действительно, при возбуждении ядра 2 - 2,5 МэВ, которое с наибольшей вероятностью возникает при неупругом рассеянии нейтронов с энергией 3 МэВ, среднее расстояние между уровнями, согласно статистическим оценкам, должно составлять примерно I кэВ. Это практически исключает возможность строгого установления схемы распада высоколежащих состояний.

Таблица Сечения возбуждения уровней ^{232}Th при неупругом рассеянии нейтронов с энергией 3 МэВ.

Энергия уровней (кэВ)	Спин и четность	Сечение (мб)	
		I*	IT*
333,2	6^+	240(I20)	I20(I20)
556,8	8^+	I3(I4)	-I4(I5)
7I4,4	I^-	I8I(I6)	46(29)
730,4	0^+	23(4)	-24(II)
774,I 774,8	2^+ 3^-	} I95(I8)	-25(36)
785,2	2^+	I7I(I7)	60(28)
829,6	3^+	I30(I5)	34(25)
873,0	4^+	22(4)	-49(I5)
888,8	5^-	99(I2)	44(I6)
890,I	(4)	99(2I)	30(25)
960,2	(4)	46(I0)	-I4(I6)
I042,7	7^-	I2(4)	-5(6)
I072,9	2^+	66(9)	8(I4)
I077,5	I^-	60(9)	0(I5)
I078,7	(0^+)	23(4)	I(6)
II05,7	3^-	87(I2)	36(I6)
II22,8	(2)	82(II)	30(I5)
II43,3	(2)	4I(6)	-8(I2)
II82,5	3^-	67(8)	26(II)

*- В скобках указана погрешность (мб)

Для расчета заселяемости низколежащих уровней γ-переходами сверху в настоящей работе использовалось предположение, что возбуждение ядра снимается последовательными циклами испускания γ-квантов, причем на каждом этапе распределение γ-переходов между уровнями подчиняется статистическим законам. Это предположение в условиях очень большого числа возбуждаемых состояний представляется вполне оправданным. Во втором столбце таблицы приведены парциальные сечения неупругого рассеяния нейтронов, полученные после вычитания расчитанных заселяемостей уровней γ-переходами.

Как видно из таблицы, возбуждение многих низколежащих уровней можно целиком приписать заселению их γ-переходами из вышележащих состояний. Это свидетельствует в пользу того, что прямой механизм возбуждения состояний в ядрах ^{232}Th, по-видимому, существен лишь для нижних уровней ротационной полосы, построенной на основном состоянии ядра.

В заключение авторы хотели бы выразить благодарность Седезневу Б.К., Гаврилову Б.П. и Белянину Ю.И. за обеспечение необходимого режима работы ускорителя, Ермакову А.В. и Хожаеву А.Н. за помощь в работе, а также Козулину Э.М. и Тутину Г.А., принимавшим участие в начальных стадиях эксперимента.

Литература

1. Haouat G. et al.-Proc. Int. Conf. on Nuclear Cross Sections for Technology, Knoxville, 1979, p. 672.
2. Коньшин В.А. -Методы оценки ядерных данных и создание библиотеки оцененных ядерных констант для делящихся ядер.-Дисс. на соиск. уч. ст. д-ра физ.-мат. наук.- Минск, ин-т тепло- и массобмена АН БССР, 1980.
3. McDaniels F.D., Glasgow G.P., McEllistrem M.T.-Proc. Int. Conf. on Nuclear Cross Sections for Technology, Knoxville, 1979, p. 135.
4. Дунин В.Н., Филатенков А.А. -В сб.: Нейтронная физика, ч. 4.-М.: ЦНИИатоминформ, 1980, с. 242.
5. Кабина Е.П. и др. -Препринт ЛИЯФ, 123, 1974.
6. Smorak M.P.-Nuclear Data Sheets, 1977, vol. 20, p. 165.
7. Egan J.J. et al.-Proc. Int. Conf. on Nuclear Cross Sections for Technology, Knoxville, 1979, p. 685.
8. Демидов А.М. и др.-В кн.: Атлас спектров гамма-излучения от неупругого рассеяния быстрых нейтронов реактора.-М.: Атомиздат, 1978, с.311.
9. Брианcон Ш. и др.-Изв. АН СССР. Сер. физ., 1977, т. 41, № 10, с. 1986.

ALPHA PARTICLE EMISSION FROM THE INTERACTION OF FAST NEUTRONS WITH ND-143 NUCLEUS

W.Augustyniak, L.Głowacka, M.Jaskóła, J.Turkiewicz, L.Zemło , Le van Khoi
Institute of Nuclear Research, Warsaw, Poland
J.Dalmas
CEN Bordeaux-Gradignan, France

The aim of the present work is to investigate the reaction mechanism of the $^{143}Nd(n,\alpha)^{140}Ce$ reaction induced by fast neutrons. The energy and angular distributions of alpha particles emitted in this reaction have been measured at neutron energies equal to 12, 14 and 18 MeV. The energy spectra of alpha particles have been analyzed in terms of Hauser-Feshbach and quasi-free scattering models. The results suggest the presence ot direct effects.

Neutrons of energies 12.3, 14.1 and 18.2 MeV were produced in the $^{3}H(d,n)^{4}He$ reaction with deuterons accelerated to 2 MeV in a Van de Graaff accelerator. The neutron energy spread due to the deuteron energy loss in the tritium target and the geometrical conditions, calculated by Monte-Carlo method, was 80 keV (En = 12.3 MeV), 120 keV (En = 14.1 MeV) and 160 keV (En = 18.2 MeV). The neutron flux was determined by counting the protons recoiled from thin polyethylene foil in a CsJ (Tl) scintillation counter.

The investigated targets were made of Nd_2O_3 (neodymium enriched to 88% with ^{143}Nd) which was deposited onto a thick aluminium backing by sedimentation method. The thicknesses of the targets used were ranging between 2 and 3 mg/cm^2.

The energies of alpha particles were measured with a single surface barrier silicon detector. The energy calibration of the spectrometer was carried out using alpha particles from the $^{28}Si(n,\alpha)^{25}Mg$ and $^{29}Si(n,\alpha)^{26}Mg$ reactions produced inside the silicon detector by the incident neutrons. The experimental arrangement was similar to that described in our earlier work [1].

The alpha particle spectra were measured at an average angle of 25° with a large angular spread of $\pm$ 15°.

The angular distributions of alpha particles contain all alpha particles with energies corresponding to the excitation of the final nucleus up to 5 MeV.

The results of the measurements are shown in figs 1-3 as the points with statistical error bars. The accuracy of the absolute cross sections determination is about 15%.

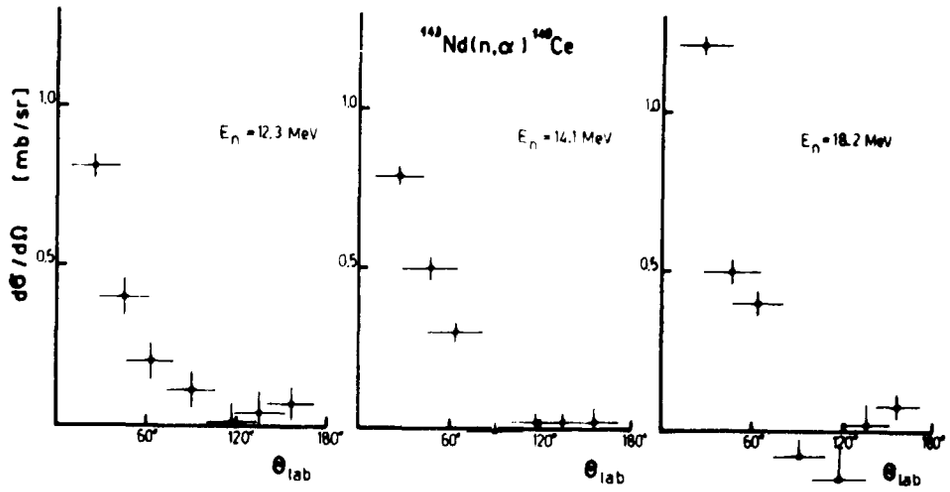

Fig.1. Angular distributions of α-particles from the $^{143}Nd(n,\alpha)^{140}Ce$ reaction.

The results of the alpha particle spectra measurements have been analyzed in the framework of the Hauser-Feshbach (H-F) and quasi-free scattering (QFS) models.

In fig.2 the predictions based on the Hauser-Feshbach theory [2] are shown. The calculations were performed on the CDC-6600 computer using the LIANA code [3]. In the calculations the channels with n, p and α as a first particle were taken into account. For the high excitation energy region, where the levels of the final nucleus are not known, the level density formula given by Gilbert and Cameron [4] was used.

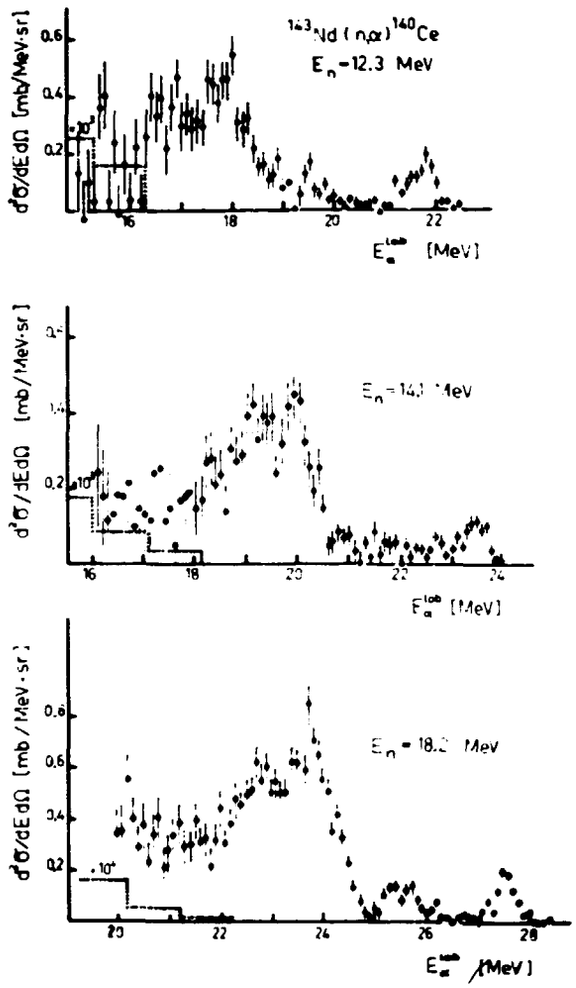

Fig.2. Comparison of the experimental cross sections with the predictions based on the Hauser-Feshbach model.

The calculated cross sections are smaller then the experimental ones by a factor of more than 10^3. The experimental spectra are also shifted considerably towards higher energies compared to the predictions of H-F theory.

In fig.3 the α-particle spectra are compared with the results of the calculations based on the QFS model proposed by Blann et al.[5]. These calculations require two parameters: the probability ϕ that an incoming nucleon will interact with an α-cluster and the energy range Δ_α over which the α-clusters are assumed to be uniformly distributed. According to the paper [5] the parameter Δ_α was taken as 20 MeV. The correct value of the cross section was obtained for $\phi \approx 0.1$ to 0.2 which is typical for (n,α) [6] and (p,α) [5,7] reactions.

A comparison of the experimental and theoretical results shows that H-F theory is completely inadequate for describing the investigated reaction. Both the absolute cross sections and the shapes of the energy and angular distributions predicted by this model are in evident disagreement with experimental data.

A better description of the cross section value is obtain for QFS model, which involves the assumption that the neutron interacts with the α-particle on the surface of the target nucleus. Recently the existence of α- clusters in heavy deformed nuclei was suggested by Murphy et al.[8].

The QFS model does not describe the structure observed in experimental spectra. This fact is probably due to the contribution of direct processes which populate strongly some states in final nucleus.

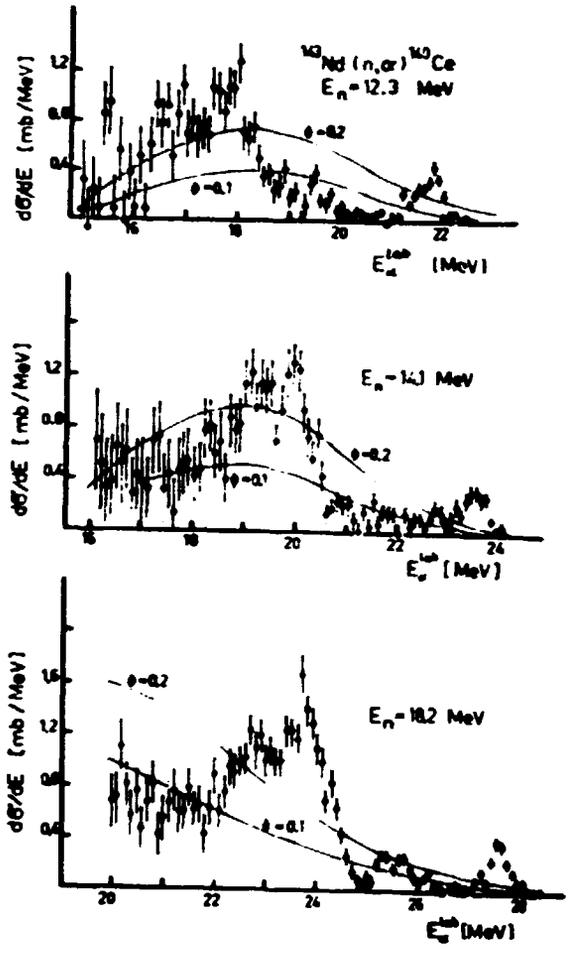

Fig.3. Comparison of the experimental α - particle spectra with the calculated ones based on the QPS model.

References

1. M.Jaskóła, J.Turkiewicz, L.Zemło and W.Osakiewicz, Acta Phys.Pol. B2 (1971) 521
2. W.Hauser and H.Feshbach, Phys.Rev. 87 (1952) 366
3. W.R.Smith, Computer Phys.Commun. 1 (1969) 106; 1 (1969) 181
4. A.Gilbert and A.G.W.Cameron, Can.J.Phys. 43 (1965) 1446
5. W.Scobel, M.Blann and A.Mignerey, Nucl.Phys. A287 (1977) 301
6. L.Głowacka, M.Jaskóła, J.Turkiewicz, L.Zemło and M.Kosłowski, Nucl.Phys. A329 (1979) 215
7. P.Plischke, W.Scobel and M.Bormann, Z.Phys.A281 (1977) 245
8. J.J.Murphy, II, D.M.Skopik, J.Asai and J.Uegaki, Phys.Rev. C18 (1978) 736