International Atomic Energy Agency

INDC(IND)-23/N

INDC INTERNATIONAL NUCLEAR DATA COMMITTEE

Systematics in E_2/M_1 Multipole Mixing Ratios of $(2'^+ - 2^+)$ Gamma Transitions in Even-Even Nuclei

I.V.S. Rathore and B.P. Singh
Department of Physics, University of Roorkee,
Roorkee 247672, India

June 1978

IAEA NUCLEAR DATA SECTION, KÄRNTNER RING 11, A-1010 VIENNA

Reproduced by the IAEA in Austria
June 1978
78-6021

INDC(IND)-23/N

Systematics in E_2/M_1 Multipole Mixing Ratios of $(2'^+ - 2^+)$ Gamma Transitions in Even-Even Nuclei

I.V.S. Rathore and B.P. Singh
Department of Physics, University of Roorkee,
Roorkee 247672, India

June 1978

Systematics in E_2/M_1 Multipole Mixing Ratios of $(2'^+ - 2^+)$ Gamma Transitions in Even-Even Nuclei

I.V.S. Rathore and B.P. Singh
Department of Physics, University of Roorkee,
Roorkee 247672, India

Abstract

$A_2^{Expt.}$ and $A_4^{Expt.}$, the angular correlation coefficients for the cascade $2'^+ - 2^+ - 0^+$ for almost all the even-even nuclei have been collected and reanalysed to calculate the amplitude mixing ratios 'δ' for $2'^+ - 2^+$ gamma-transitions. There are two methods for analysing the data, viz. Arns and Wiedenbeck method using A_2 values or A_4 values, and that of Coleman using A_2 and A_4 values. The phases and values which are common in both the analyses, are taken for the analysis. The plot $\ln |\delta/E_\gamma|$ versus mass number (A) is given along with the values predicted by Greiner's model and that of Krane. Many systematics obtained in the values and phases of 'δ' are presented.

E [RADIOACTIVITY; Collected $\gamma\gamma(\theta)$; Analysed and deduced E_2/M_1 mixing ratio with phases; Reported systematics]

1. INTRODUCTION

Many attempts [Potnis and Rao[1], Grechukhin[2], Tamura and Yoshida[3], Krane[4], Greiner[5], Davydov and Filippov[6], Hamilton[7], and Kumar[8]] in the past have been made to compile E_2/M_1 multipole mixing ratios ($\equiv$ ' δ ') and relative phases. In all these attempts, the magnitude of ' δ ' has been the main consideration. Krane[4] has compiled the number of cases with positive and negative phases along with their magnitudes. Krane[4] has further reported that there is no correlation or any systematics in phases of ' δ '. An attempt has been made to investigate the phases of ' δ ' and also its magnitude. Another objective of the present study is to find out the systematics in the magnitudes and phases which may reveal the nuclear structure.

2. PHASE CONVENTION AND DEFINITIONS

In extracting the mixing ratios from the quoted angular correlation coefficients, the sign convention of Biedenharn and Rose [9] has been followed, in which the first transition is the absorption to form an intermediate state followed by the second transition, consisting of the emission.

The angular correlation coefficients for the cascade $I_i \xrightarrow{\gamma_1} I \xrightarrow{\gamma_2} I_f$ in which the initial transition is a mixture of M1 and E2, are written as:

$$A_k = \frac{Z(L_1 I L_1 I;\, I_i k) + 2\delta\, Z(L_1 I L_1' I;\, I_i k) + \delta^2 Z(L_1' I L_1' I; I_i k)}{1+\delta^2}$$

$$\times\, Z(L_2 I L_2 I; I_f k) \qquad \ldots(1)$$

where ' δ ' the amplitude mixing ratio, is defined as

$$\delta = \frac{\langle I \| L_1' \pi_1' \| I_i \rangle}{\langle I \| L_1 \pi_1 \| I_i \rangle} \qquad \ldots(2)$$

The sign convention of Biedenharn and Rose[9] is compared with Krane[10] and Rose-Brink[11] conventions for a cascade as

$$\delta(\gamma_1)_{BR} = -\delta(\gamma_1)_{KS}, \quad \delta(\gamma_1)_{RB} = -\delta(\gamma_1)_{KS}$$

$$\delta(\gamma_2)_{BR} = \delta(\gamma_2)_{KS}, \quad \delta(\gamma_2)_{RB} = -\delta(\gamma_2)_{KS} \qquad \ldots(3)$$

The mixing ratio ' δ ' may be compared with theoretical values through the expression, as defined by Krane[4)]

$$\frac{\delta}{E_\gamma} = 0.835 \frac{\langle I \| m(E2) \| I_1 \rangle}{\langle I \| m(M1) \| I_i \rangle} \qquad \ldots(4)$$

where E_γ is the gamma-ray energy in MeV. For the purpose of theoretical comparison, it is useful to define the mixing ratio

$$\Delta = \left(\frac{\delta}{0.835\ E_\gamma}\right) \quad \text{as}$$

$$\Delta = \frac{\langle I \| m(E2) \| I_i \rangle}{\langle I \| m(M1) \| I_i \rangle} \qquad \ldots(5)$$

where Δ is given in units of eb/ μ_N.

3. COMPILATION AND ANALYSIS OF THE ANGULAR CORRELATION COEFFICIENTS

The angular correlation coefficients (A_2 and A_4) for the cascade $2'^+ - 2^+ - 0^+$ from almost all the radioactive disintegrations as reported by — various authors are collected and are given in Table I. The details of the cascade, i.e. energies of γ_1 and γ_2 along with the references are also given. The analysis of the angular correlation data has been done by two methods which are as follows.

3.1. THE ANALYSIS OF THE MULTIPOLE MIXING RATIOS BY THE METHOD OF ARNS AND WIEDENBECK

Arns and Wiedenbeck[12)] have suggested the method to determine the magnitude and phase of the multipole mixing ratio if one transition of gamma-gamma cascade is mixed. The theoretical plot of A_2 versus $Q\left(= \frac{\delta^2}{1+\delta^2}\right)$ is done and an ellipse is obtained. The multipole mixing ratio ' δ ' is determined if the experimental value with the error cuts the curve. Such type of plot is given in Figure 1. The values of mixing ratios as obtained by this analysis are given in Table II.

3.2. ANALYSIS OF THE MULTIPOLE MIXING RATIO BY THE GRAPHICAL METHOD OF COLEMAN

Coleman[13)] has introduced a method for evaluating the multipole mixing ratio ' δ ' from gamma-gamma directional correlation experiment if only one transition is mixed by using both A_2 and A_4 values. One plots the curve of A_2 versus A_4 for a $2^{-+} - 2^+ - 0^+$ cascade as shown

in Fig. 2. This curve is labelled with the values of 'δ' (or more conveniently with the values of the parameter $\delta' = \left|\frac{\delta}{1-\delta}\right|$

The measured experimental values with the errors for both A_2 and A_4 are depicted in the plot which gives the best fit value of 'δ' with phases, as shown in Fig. 2. The values thus obtained are given in Table II.

4. MULTIPOLE MIXING RATIOS ON THE BASIS OF GREINER'S MODEL

Walter Greiner[5] has reported a model to calculate the g-factors and E2/M1 multipole mixing ratios in vibrational nuclei. The basic idea of the proposed model is based on the assumption that the proton distribution in nuclei is less deformed than the neutron distribution because the pairing force acting between protons is larger than between the neutrons. Let G_p and G_n be the pairing forces for protons and neutrons respectively; Nilsson and Prior[14] have found the values for $G_p = \frac{25}{A}$ MeV and $G_n = \frac{18}{A}$ MeV, while Marschalek and Rasmussen[15] use $G_p = \frac{30}{A}$ MeV and $G_n = \frac{20}{A}$ MeV.

The average deformation β_o of the mass distribution is defined as

$$\beta_o = \frac{N\beta_o(n) + Z\beta_o(p)}{A} \qquad \ldots(6)$$

where $\beta_o(n)$ and $\beta_o(p)$ are the neutron and proton deformations.

Greiner[5] has given the expression for the calculation of $\Delta\ (\equiv \delta/E_\gamma)$ which is written as

$$\Delta = \frac{(1.1 \times 10^{-3})A^{5/3}\,\beta_o}{f(1-2f)} \qquad \ldots(7)$$

where f gives the difference in proton and neutron deformations

$$f = \frac{N}{A}\left[\frac{\beta_o(n)}{\beta_o(p)} - 1\right] \qquad \ldots(8)$$

The parameter f is calculated from equation (8). The root mean square deformation β_o for the first excited state is given by Greiner[16]. Putting the values of these parameters in equation (7), the value of multipole mixing ratio $\Delta\ (\equiv \delta/E_\gamma)$ is obtained. The mixing ratios for a number of nuclei have been calculated and it is found that the sign of Δ is always positive.

5. THE MAGNITUDE OF ' δ '

The plot of $\Delta(\equiv\delta/E_\gamma)$ versus mass number A is given in Figure 3. The calculated values of Δ on the basis of Greiner's model[5], are also given in the Figure 3 and are denoted by dotted line. The plot as done by Krane[4] is also given which accordingly to him indicates the trend of the measured values and shows a pronounced minimum in the vicinity of the closed shells.

In the present analysis, it is indicated that we can divide the nuclei in five groups by drawing straight lines as given in Figure 3. These straight lines are obtained by the method of least square fit[16] for values for nuclei in the groups. The error is calculated by the method given in Daniel and Wood[17] and indicated by the broken lines. Almost all the values of Δ lie within the groups. In the first four groups, the values of Δ approach to zero when the neutron numbers or proton numbers are at or around shell closure, except in the fifth group, indicating as if there is one more shell type structure. The slopes of these groups with the errors are as follows:

Group I $\quad \frac{\ln|\Delta|}{A} = 0.1154 \pm 0.0262$

Group II $\quad \frac{\ln|\Delta|}{A} = 0.1554 \pm 0.0403$

Group III $\quad \frac{\ln|\Delta|}{A} = 0.1505 \pm 0.0212$

Group IV $\quad \frac{\ln|\Delta|}{A} = 0.2070 \pm 0.0244$

Group V $\quad \frac{\ln|\Delta|}{A} = 0.1877 \pm 0.0330$

6. THE PHASES OF ' δ '

The phases of ' δ ' are as given in the Table II and are also plotted (Figure 4). The X- and Y-axes are taken Z (atomic number) and N (neutron number) respectively. The phase (+) or (-) is given for almost all nuclei except four cases (Ge^{72}, Se^{74}, Mo^{94} and Gd^{152}). The plot clearly indicates a certain system. The line as given in Figure 4, separates positive and negative phases. For every eight protons, we find a change as indicated in the Figure. These proton numbers are at 37, 45, 53, 61, 69 and 77. There is a change at 29 but again at 31 as well. Below 29 and above 77, there is no such type of structure.

7. ENERGY OF $2'^+$ EXCITED STATES

In all these nuclei, the first excited state is 2^+ and second excited is not $2'^+$ but this lies above 4^+ or 6^+ or 8^+ or above 0^+. 0^+ may lie between 2^+ and $2'^+$, or 4^+ and $2'^+$ or between 2^+ and 4^+. All these cases can be divided in five main groups as given in Figure 5. The decay schemes of the isotopes Sr^{88}, Ru^{100}, Ce^{140}, Sm^{152}, Gd^{152}, Gd^{154} and Hf^{174}, do not lie in the five groups but are different.

The following Table gives the number of cases in various categories along with (+) and (-) phases and large and small values of ' δ '.

Group	A	B	C	D	E
Number of cases	33	11	6	2	4
Number of cases having phases	+ 12 - 21	7 4	2 5	2 -	3 1
Number of cases, large values with phases	+ 10 - 11	7 -	2 1	- -	2 1
Small values with phases	+ 2 - 10	- 4	- 4	- -	1 -

The almost 50 percent cases are in group A where the second excited state is $2'^+$. This classification may be considered on the basis of β- and γ-vibrational bands and may also help in microscopic calculations for the nuclear structure studies.

Acknowledgement

The authors are thankful to the Department of Atomic Energy, Government of India, for financial assistance in the form of a research project.

References

1) V.R. Potnis and G.N. Rao, Nucl. Phys. 42(1963), 620.

2) D.P. Grechukhin, Nucl. Phys. 40 (1963), 422.

3) T. Tamura and H. Yoshida, Nucl. Phys. 30 (1962), 579.

4) K.S. Krane, Phys. Rev. C10 (1974), 1197.

5) W. Greiner, Nucl. Phys. 80(1966), 417.

6) A.S. Davydov and G.F. Filippov, Nucl. Phys. 8, (1958), 237.

7) J.H. Hamilton, In AngularCorrelations in Nuclear Disintegrations (edited by H. Van Krugten and B. Van Wooijen, Rotterdam, U.P., Netherlands, 1971) p. 181.

8) K. Kumar, Gamma-Ray Transition Probabilities (edited by S.C. Pancholi and S.L. Gupta, Delhi University Press, 1976) P1-31.

9) L.C. Biedenharn and M.E. Rose, Rev. Mod. Phys. 25 (1953), 729.

10) K.S. Krane and R.M. Steffen, Phys. Rev. C2 (1970), 724.

11) H.J. Rose and D.M. Brink, Rev. Mod. Phys. 39 (1967), 306.

12) R.G. Arns and M.L. Wiedenbeck, Phys.Rev. 111 (1958), 1631.

13) C.F. Coleman, Nucl. Phys. 5 (1958), 495.

14) S.G. Nilsson and O. Prior, Mat.Fys. Medd Dan.Vid.Selsk 32, No.32 (1961).

15) E.R. Marschallek and J.O. Rasmussen, Nucl. Phys. 43 (1963), 438.

16) J.M. Eisenberg and W. Greiner, Nuclear Theory Vol. I (North-Holland Publishing Company, Amsterdam).

17) C. Daniel and F.S. Wood, Fitting Equations To Data (Division of John Willey and Sons. Inc. New York, 1971) p.10.

TABLE-I

Angular correlation coefficients for $2'^{+} \rightarrow 2^{+} \rightarrow 0^{+}$ cascade

Nucleus	E_1 (keV)	E_2 (keV)	$\hbar\omega$ (keV)	Expt. A_2	Expt. A_4	Reference
$_{26}Fe^{58}_{32}$	1675	810	865	0.45±0.04	0.08±0.09	R.A.Fox etal,P.R.C5, 853 (1972).
$_{28}Ni^{58}_{30}$	2775	1454	1321	-0.27±0.03	0.16±0.04	D.F.H.Start etal.,N.P. A162,49 (1971).
$_{28}Ni^{60}_{32}$	2156	1330	826	-0.30±0.03	0.15±0.05	S.M.Shaforth etal,P.R. 149,827 (1966).
$_{28}Ni^{62}_{34}$	2301	1173	1128	0.415±0.053	0.082±0.131	D.M.Van Patter etal, N.P.A178,355 (1972).
$_{30}Zn^{64}_{34}$	1800	992	810	-0.200±0.022	-0.020±0.032	A.K.Sen Gupta etal., P.L.3,355 (1963).
$_{30}Zn^{66}_{36}$	1872	1039	833	0.30±0.05	0.21±0.07	T.Hayashi etal., J.P.S. (J)27,1375 (1969).
$_{30}Zn^{68}_{38}$	1883	1077	806	0.369±0.025	0.234±0.034	J.Lange etal.,P.R.C7, 177 (1973).
$_{32}Ge^{72}_{40}$	1464	834	630	-0.002±0.009	0.311±0.012	H.Chen etal.,N.P.A219, 365 (1974).
$_{32}Ge^{74}_{42}$	1204	596	609	-0.251±0.015	0.27±0.04	M.C.Cambiaggio etal., Z.P.A275,183 (1975).
$_{32}Ge^{76}_{44}$	1108	563	545	0.14±0.04		K.C.Chung etal., P.R. C2,139 (1970).
$_{34}Se^{74}_{40}$	1270	635	635	0.213±0.022	0.272±0.044	M.C.Cambiaggio etal., Z.P.A275, 183 (1975).
$_{34}Se^{76}_{42}$	1216	559	657	-0.185±0.012	0.305±0.021	T.Nagahara etal.,J.P.S. (J)34, 579 (1973).
$_{34}Se^{78}_{44}$	1306	613	693	0.22±0.03	0.03±0.04	R.M.Lieder etal., P.R. C2, 531 (1970)
$_{36}Kr^{78}_{42}$	1119	455	664	0.11±0.04	0.03±0.07	N.E.Andernson etal., J.P.A(GB)7,1156(1974).
$_{36}Kr^{80}_{44}$	1256	616	639	-0.12±0.04	0.21±0.07	T.Hayashi etal.,J.P.S (J)27,1375 (1969).
$_{36}Kr^{82}_{46}$	1475	777	698	-0.307±0.015	0.239±0.010	J.Kotch etal,N.P.103, 300 (1967).
$_{36}Kr^{84}_{48}$	1897	881	1016	-0.056±0.050	0.426±0.089	J.P.Roalsvig etal., P.R.138,B1378 (1965).

Nucleus	E_1 (keV)	E_2 (keV)	$\hbar\omega$ (keV)	$A_2^{Expt.}$	$A_4^{Expt.}$	Reference
$_{38}Sr^{86}_{48}$	1854	1077	777	0.040±0.023	0.017±0.037	R.G.Arns etal,N.P. A148,625 (1970).
$_{38}Sr^{88}_{50}$	3223	1836	1387	0.217±0.014	-0.004±0.016	Y.Kawase etal.,N.P. A154, 127 (1970).
$_{42}Mo^{94}_{52}$	1864	871	993	0.28±0.04	0.22±0.011	N.K.Aras etal,N.P.A112, 609 (1968).
$_{42}Mo^{96}_{54}$	1498	778	720	-0.072±0.020	0.056±0.036	D.Heck etal, N.P. A159, 49 (1970).
$_{42}Mo^{98}_{56}$	1432	787	645	-0.147±0.020	0.060±0.035	D.Heck etal,N.P. A165,327 (1971).
$_{44}Ru^{100}_{56}$	1360	540	820	-0.196±0.024	0.324±0.030	H.Kawakanic etal, J.P.S.(J)24,614 (1968).
$_{44}Ru^{102}_{58}$	1103	475	628	-0.069±0.017	0.347±0.033	B.Singh etal,N.P.A155, 90 (1970).
$_{46}Pd^{104}_{58}$	1323	556	767	0.16±0.06	0.02±0.04	N.C.Singhal etal.,P.R. C5, 948 (1972).
$_{46}Pd^{106}_{60}$	1125	513	612	0.100±0.040	0.310±0.007	J.Kotch etal, N.P.103, 300 (1967).
$_{46}Pd^{108}_{62}$	1441	434	1007	0.069±0.024	0.055±0.033	K.Okano etal, N.P.A164, 545 (1971).
$_{46}Pd^{110}_{64}$	810	374	436	-0.220±0.037		R.L.Robinson etal, N.P.A166, 141 (1971).
$_{48}Cd^{110}_{62}$	1476	658	818	0.375±0.050	0.180±0.050	K.S.Krane etal,P.R.C2, 724 (1970).
$_{50}Sn^{116}_{66}$	2109	1293	819	0.31±0.02	0.27±0.05	G.Garncia Barmudiz etal, P.R.C9,1060 (1974).
$_{52}Te^{122}_{70}$	1250	564	686	0.142±0.006	0.298±0.005	J.Kotch etal, N.P.103, 300 (1967).
$_{52}Te^{124}_{72}$	1325	603	723	0.136±0.009	0.270±0.015	K.R.Baker etal, N.P. A189, 493 (1972).
$_{52}Te^{126}_{74}$	1421	667	754	0.052±0.028	0.291±0.035	Z.W.Grabowski etal, P.R.C3,1649 (1971).
$_{54}Xe^{126}_{72}$	880	389	491	-0.110±0.012	0.341±0.030	Z.W.Grabowski etal, P.R.C3,1649 (1971).
$_{54}Xe^{128}_{74}$	955	540	415	-0.18±0.01	0.36±0.02	T.Hayashi etal, N.I.M 53,123 (1967).
$_{54}Xe^{132}_{78}$	1297	667	630	-0.162±0.047	0.363±0.092	H.W.Taylor etal,C.J.P. 49,2724 (1971).
$_{54}Xe^{134}_{80}$	1613	847	766	0.220±0.043	0.062±0.065	J.M.Gualda etal,N.P. A234, 357 (1974).

Nucleus	E_1 (keV)	E_2 (keV)	$\hbar\omega$ (keV)	$A_2^{Expt.}$	$A_4^{Expt.}$	Reference
$_{56}Ba^{132}_{76}$	1031	464	567	-0.177 ± 0.032	0.296 ± 0.063	H.W.Taylor etal,C.J.P. 49,2724 (1971).
$_{56}Ba^{134}_{78}$	1168	605	563	-0.16 ± 0.10	0.27 ± 0.13	M.Behar etal, N.P.A192, 218 (1972).
$_{56}Ba^{136}_{80}$	1900	830	1065	0.100 ± 0.008	0.008 ± 0.018	Z.W.Grabowski etal,N.P. 20, 159 (1960).
$_{56}Ba^{140}_{84}$	1511	602	908	0.436 ± 0.023	0.147 ± 0.028	L.J.Alquist etal,P.R. C13, 1277 (1976).
$_{58}Ce^{140}_{82}$	2348	1597	752	-0.030 ± 0.036	0.029 ± 0.064	R.N.Saxena etal,P.R. C7, 395 (1973).
$_{58}Ce^{142}_{84}$	1436	641	895	0.417 ± 0.034	0.089 ± 0.036	G.J.Basinger etal,P.R. C11, 1755 (1975).
$_{60}Nd^{144}_{84}$	1561	696	865	$0.34^{+0.09}_{-0.08}$	$0.23^{+0.03}_{-0.06}$	M.Behar etal, N.P.A219, 516 (1974).
$_{62}Sm^{152}_{90}$	810	122	688	-0.16 ± 0.04	0.36 ± 0.07	C.A.Kalfas etal,J.P.A. (GB)6, 247 (1973).
$_{64}Gd^{152}_{88}$	930	344	586	0.282 ± 0.061	0.202 ± 0.104	Barrette etal, C.J.P. 48, 2011 (1970).
$_{64}Gd^{154}_{90}$	816	123	693	-0.145 ± 0.022	0.311 ± 0.040	L.C.Whitlock etal,P.R. C3, 313 (1971).
$_{64}Gd^{156}_{92}$	1129	89	1040	0.054 ± 0.043	0.25 ± 0.09	J.H.Hamilton etal,P.R. C5, 899 (1972).
$_{64}Gd^{158}_{94}$	1026	795	946	0.070 ± 0.015	0.02 ± 0.03	F.Schima etal, N.P.63, 305 (1965).
$_{66}Dy^{160}_{94}$	966	87	879	0.002 ± 0.017	0.324 ± 0.025	K.S.Krane etal,N.P.A164, 439 (1971).
$_{70}Yb^{174}_{104}$	1316	76	1240	0.064 ± 0.028	0.032 ± 0.046	H.J.Prask etal,N.P.29, 100 (1962).
$_{72}Hf^{174}_{102}$	899	91	808	-0.067 ± 0.04	-0.044 ± 0.053	H.Ejiri etal,N.P.A161, 449 (1971).
$_{72}Hf^{178}_{106}$	1276	93	1183	-0.054 ± 0.023	0.041 ± 0.033	P.E.Little etal,P.R.C5, 252 (1972).
$_{72}Hf^{180}_{108}$	308	93	215	0.093 ± 0.007	0.014 ± 0.009	S.D.Koicki etal,B.I.N. S.B.Kidrich 13, 1(1962).

Nucleus	E_1 (keV)	E_2 (keV)	$\hbar\omega$ (keV)	$A_2^{Expt.}$	$A_4^{Expt.}$	Reference
$_{74}W^{182}_{108}$	1221	100	1121	-0.127±0.011	0.320±0.011	L.M.Quinones etal. N.P.A.242, 243 (1975).
$_{74}W^{184}_{110}$	904	111	793	-0.027±0.003	0.307±0.015	H.J.Komer etal,P.A.C. Suppl.Uppsala,May (1963
$_{76}Os^{186}_{110}$	767	137	630	-0.001±0.052	0.302±0.049	K.S.Krane etal., P.R. C3,240 (1971).
$_{76}Os^{188}_{112}$	633	155	478	-0.015±0.014	0.288±0.021	K.S.Krane etal,P.R.C3, 240 (1971).
$_{76}Os^{190}_{114}$	558	187	371	-0.011±0.02	0.28±0.03	H.Helppi etal,N.P. A223, 13 (1974).
$_{78}Pt^{192}_{114}$	612	316	296	-0.150±0.003	0.312±0.004	H.Helppi etal,N.P.A223, 13 (1974).
$_{78}Pt^{194}_{116}$	623	329	294	-0.092±0.013	0.303±0.020	H.A.Doubt etal,N.P. A177, 418 (1971).
$_{78}Pt^{196}_{118}$	689	356	333	0.113±0.005	0.315±0.010	H.A.Doubt etal,N.P. A177, 418 (1971).
$_{80}Hg^{198}_{118}$	1049	412	637	0.10±0.01	0.01±0.02	R.Berand etal,Priv. Comm.April (1971).
$_{80}Hg^{200}_{120}$	947	368	579	0.102±0.009	0.021±0.014	Z.Hattula etal.Z.P. 241, 117 (1971).

* Abbreviations used for the nemes of the journals.

P.R.: Physical Review

N.P.: Nuclear Physics

Z.P.: Z.Physics

C.J.P.: Canadian Journal of Physics

J.P.S.: Journal of Physical Society (Japan)

P.L.: Physics Letters

TABLE-II

E2/M1 multipole mixing ratios from the quoted angular correlation coefficients.

Nucleus	Mean value of δ^a	Mean value of δ^b				Mean value of δ taken	Value of δ^c from the literature	(eb/μ_N)
		Q_1	δ_1	Q_2	δ_2			
$_{26}Fe^{58}_{32}$	+0.26	0.13	+0.39	0.5	+1.0	+1.0	$+(1.0^{+0.60}_{-0.20})$	+1.385
$_{28}Ni^{58}_{30}$	-1.0	0.465	-0.93	0.885	-2.77	-1.0	-1.1 ± 0.2	-0.91
$_{28}Ni^{60}_{32}$	-1.0	0.575	-1.16	0.82	-2.13	-1.0	$-1.3\leq\delta\leq-0.9$	-1.45
$_{28}Ni^{62}_{34}$	+0.26	0.07	+0.27	0.59	+1.20	+0.27	Not deduced	+0.29
$_{30}Zn^{64}_{34}$	-0.66	0.325	-0.69	0.965	-5.25	-0.69	Not deduced	-1.02
$_{30}Zn^{66}_{36}$	+0.37	0.05	+0.07	0.775	+1.85	+1.85	2.0	+2.66
$_{30}Zn^{68}_{38}$	+0.37	0.035	+0.19	0.675	+1.44	+1.44	$+1.45\pm0.14$	+2.14
$_{32}Ge^{72}_{40}$	+0.47	0.1	-0.33	0.99	+9.95	+9.95	10.3 ± 1.3	+18.92
$_{32}Ge^{74}_{42}$	-2.33	0.425	-0.86	0.82	-2.13	-2.13	-3.4 ± 0.4	-4.19
$_{32}Ge^{76}_{44}$	-0.11	0.02	-0.14	0.925	+3.51	-0.14	-0.1 ± 0.1	-0.31
$_{34}Se^{74}_{40}$	+0.41	0.003	-0.05	0.865	+2.53	+2.53	$+2.6\pm0.2$	+4.77
$_{34}Se^{76}_{42}$	-5.67	0.315	-0.68	0.97	-5.69	-5.69	Not deduced	-10.38
$_{34}Se^{78}_{44}$	-0.05	0.003	-0.05	0.860	+2.48	-0.05	Not deduced	-0.08
$_{36}Kr^{78}_{42}$	-0.17	0.03	-0.17	0.945	+4.14	-0.17	Not deduced	-0.31
$_{36}Kr^{80}_{44}$	-12.33	0.21	-0.51	0.995	-14.11	-14.11	Not deduced	-26.47
$_{36}Kr^{82}_{46}$	-1.86	0.62	-1.28	0.77	-1.83	-1.83	-1.65 ± 0.15	-3.14
$_{36}Kr^{84}_{48}$	+0.49	0.145	-0.41	0.995	+14.11	+14.11	Not deduced	+16.64
$_{38}Sr^{86}_{48}$	-0.25	0.07	-0.27	0.98	+7.0	-0.27	$0.05\leq Q\leq0.09$	-0.42
$_{38}Sr^{88}_{50}$	-0.05	0.003	-0.05	0.86	+2.48	-0.05	-0.04 ± 0.02	-0.04
$_{42}Mo^{94}_{52}$	+0.39	0.003	+0.05	0.8	+2.0	+2.0	2	+2.41
$_{42}Mo^{96}_{54}$	-0.43	0.16	-0.44	0.997	+18.23	-0.44	$-0.44^{+0.04}_{-0.03}$	-0.73
$_{42}Mo^{98}_{56}$	-0.54	0.25	-0.58	0.97	-5.69	-0.58	-0.58 ± 0.05	-1.08

* Mean value of δ

(a) From the plot of A_2 versus A_4

(b) From the plot of A_2 versus Q

(c) Sign convention of Biedenharn and Rose[9]

Nucleus	Mean value of δ^a	Mean value of δ^b				Mean value of δ taken	Value of δ^c from the literature	Δ (eb/μ_N)
		Q_1	δ_1	Q_2	δ_2			
$_{44}Ru^{100}_{56}$	-5.67	0.32	-0.69	0.97	-5.69	-5.69	$-6^{+2.5}_{-1.5}$	-8.31
$_{44}Ru^{102}_{58}$	∞	0.16	-0.44	0.997	+18.23	+18.23	60±20	+34.79
$_{46}Pd^{104}_{58}$	-0.11	0.01	-0.10	0.91	+3.18	-0.10	Not deduced	-0.16
$_{46}Pd^{106}_{60}$	+0.44	0.035	-0.19	0.945	+4.14	+4.14	+4.35±0.80	+8.10
$_{46}Pd^{108}_{62}$	-0.25	0.05	-0.23	0.97	+5.69	-0.23	-0.24±0.04	-0.27
$_{46}Pd^{110}_{64}$		0.36	-0.75	0.95	-4.36	-0.75	-0.77±0.11	-2.04
$_{48}Cd^{110}_{62}$	+0.35	0.04	+0.20	0.665	+1.41	+1.41	+1.20±0.15	+2.06
$_{50}Sn^{116}_{66}$	+0.39	0.01	+0.10	0.755	+1.75	+1.75	+1.8±0.2	+2.56
$_{52}Te^{122}_{70}$	+0.44	0.02	-0.14	0.925	+3.51	+3.51	+3.52±0.10	+6.12
$_{52}Te^{124}_{72}$	+0.43	0.02	-0.14	0.93	+3.64	+3.64	+3.3±0.2	+6.02
$_{52}Te^{126}_{74}$	+0.46	0.065	-0.26	0.975	+6.24	+6.24	$+5.5^{+0.4}_{-0.3}$	+9.90
$_{54}Xe^{126}_{72}$	-19.0	0.205	-0.50	0.997	-18.23	-18.23	-27^{+30}_{-9}	-44.46
$_{54}Xe^{128}_{74}$	-5.67	0.30	-0.65	0.975	-6.24	-6.24	Not deduced	-18.03
$_{54}Xe^{132}_{78}$	-9.0	0.275	-0.62	0.99	-9.95	-9.95	-18^{+50}_{-9}	-18.91
$_{54}Xe^{134}_{80}$	-0.05	0.003	-0.05	0.86	+2.48	-0.05	-2.4±02	-0.08
$_{56}Ba^{132}_{76}$	-5.67	0.30	-0.65	0.975	-6.24	-6.24	-9^{+7}_{-8}	-13.19
$_{56}Ba^{134}_{78}$	-7.00	0.275	-0.61	0.99	-9.95	-9.95	$\delta \leq -30$	-21.17
$_{56}Ba^{136}_{80}$	-0.17	0.035	-0.19	0.95	+4.36	-0.19	$-0.21 \leq \delta \leq -0.19$	-0.18
$_{56}Ba^{140}_{84}$	+0.31	0.105	+0.34	0.54	+1.08	+0.34	$+1.1^{+0.14}_{-0.10}$	+0.45
$_{58}Ce^{140}_{82}$	-0.43	0.125	-0.38	0.995	+14.11	-0.38	$-0.3^{+0.01}_{-0.02}$	-0.61
$_{58}Ce^{142}_{84}$	+0.26	0.075	+0.28	0.59	+1.20	+0.28	+0.61±0.018	+0.37
$_{60}Nd^{144}_{84}$	+0.37	0.015	+0.12	0.72	+1.60	+1.60	+1.6±0.5	+2.22
$_{62}Sm^{152}_{90}$	-9.0	0.275	-0.62	0.99	-9.95	-9.95	-8^{+9}_{-3}	-17.33

Nucleus	Mean value of δ^a	Mean value of δ^b				Mean value of δ taken	Value of δ^c from the literature	Δ (eb/μ_N)
		Q_1	δ_1	Q_2	δ_2			
$_{64}Gd^{152}_{88}$	+0.39	0.003	+0.05	0.8	+2.0	+2.0	2.0 ± 0.5	+4.03
$_{64}Gd^{154}_{90}$	-9.0	0.25	-0.58	0.99	-9.95	-9.95	-11 ± 3	-17.18
$_{64}Gd^{156}_{92}$	+0.46	0.06	-0.26	0.975	+6.24	+6.24	$5.9^{+1.4}_{-2.8}$	+7.19
$_{64}Gd^{158}_{94}$	-0.17	0.05	-0.23	0.97	+5.69	-0.23	Not deduced	-0.29
$_{66}Dy^{160}_{94}$	+0.47	0.1	-0.33	0.99	+9.95	+9.95	$+(9.7^{+2.5}_{-1.7})$	+13.56
$_{70}Yb^{174}_{104}$	-0.25	0.06	-0.25	0.965	+5.25	-0.25	-0.26 ± 0.04	-0.24
$_{72}Hf^{174}_{102}$	-0.48	0.155	-0.43	0.997	+18.23	-0.43	$0 \geq \delta^{-1} \leq -0.24$	-0.64
$_{72}Hf^{178}_{106}$	-0.43	0.145	-0.41	0.997	+18.23	-0.41	$0.410^{+0.036}_{-0.035}$	-0.42
$_{72}Hf^{180}_{108}$	-0.17	0.035	-0.19	0.955	+4.61	-0.19	-0.20	-1.06
$_{74}W^{182}_{108}$	-9.0	0.275	-0.54	0.995	-14.11	-14.11	-12^{+2}_{-1}	-15.07
$_{74}W^{184}_{110}$	+0.49	0.12	-0.37	0.995	+14.11	+14.11	+15	+21.31
$_{76}Os^{186}_{110}$	+0.47	0.1	-0.33	0.99	+9.95	+9.95	$+10^{+15}_{-4}$	+18.92
$_{76}Os^{188}_{112}$	+0.47	0.105	-0.34	0.995	+14.11	+14.11	$+12.3 \pm 2.8$	+35.36
$_{76}Os^{190}_{114}$	+0.47	0.105	-0.34	0.995	+14.11	+14.11	$+12^{+3}_{-5}$	+45.52
$_{78}Pt^{192}_{114}$	-9.0	0.26	-0.59	0.99	-9.95	-9.95	$+8.8 \pm 0.3$	-40.28
$_{78}Pt^{194}_{116}$	-39	0.18	-0.47	0.995	-14.11	-14.11	-45^{+55}_{-19}	-57.59
$_{78}Pt^{196}_{118}$	+0.44	0.02	-0.16	0.98	+7.00	+7.00	$+4.3 \pm 0.2$	+25.18
$_{80}Hg^{198}_{118}$	-0.17	0.035	-0.19	0.95	+4.36	-0.19	-0.19	-0.36
$_{80}Hg^{200}_{120}$	-0.17	0.035	-0.19	0.95	+4.36	-0.19	-0.19 ± 0.01	-0.39

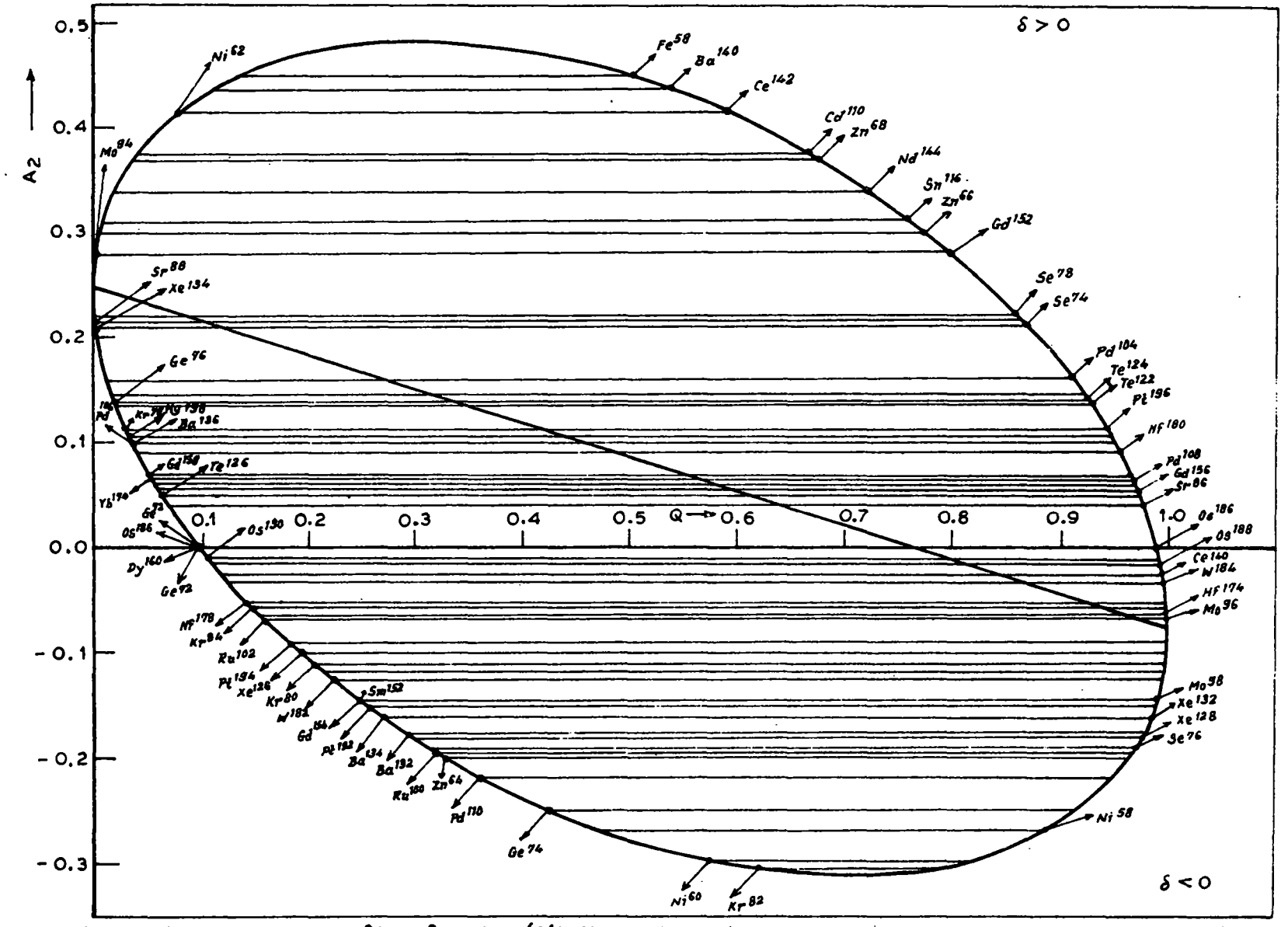

Theoretical plot of A_2 versus Q [$\equiv \delta^2/(1+\delta^2)$, where '$\delta$' is the mixing ratio in ($2'^+ \to 2^+$) γ-transition and other ($2^+ \to 0^+$) transition is pure E2] for the spin sequence $2'^+ \to 2^+ \to 0^+$. This is done by the method of Arns and Wiedendeck (12).

FIG. 1

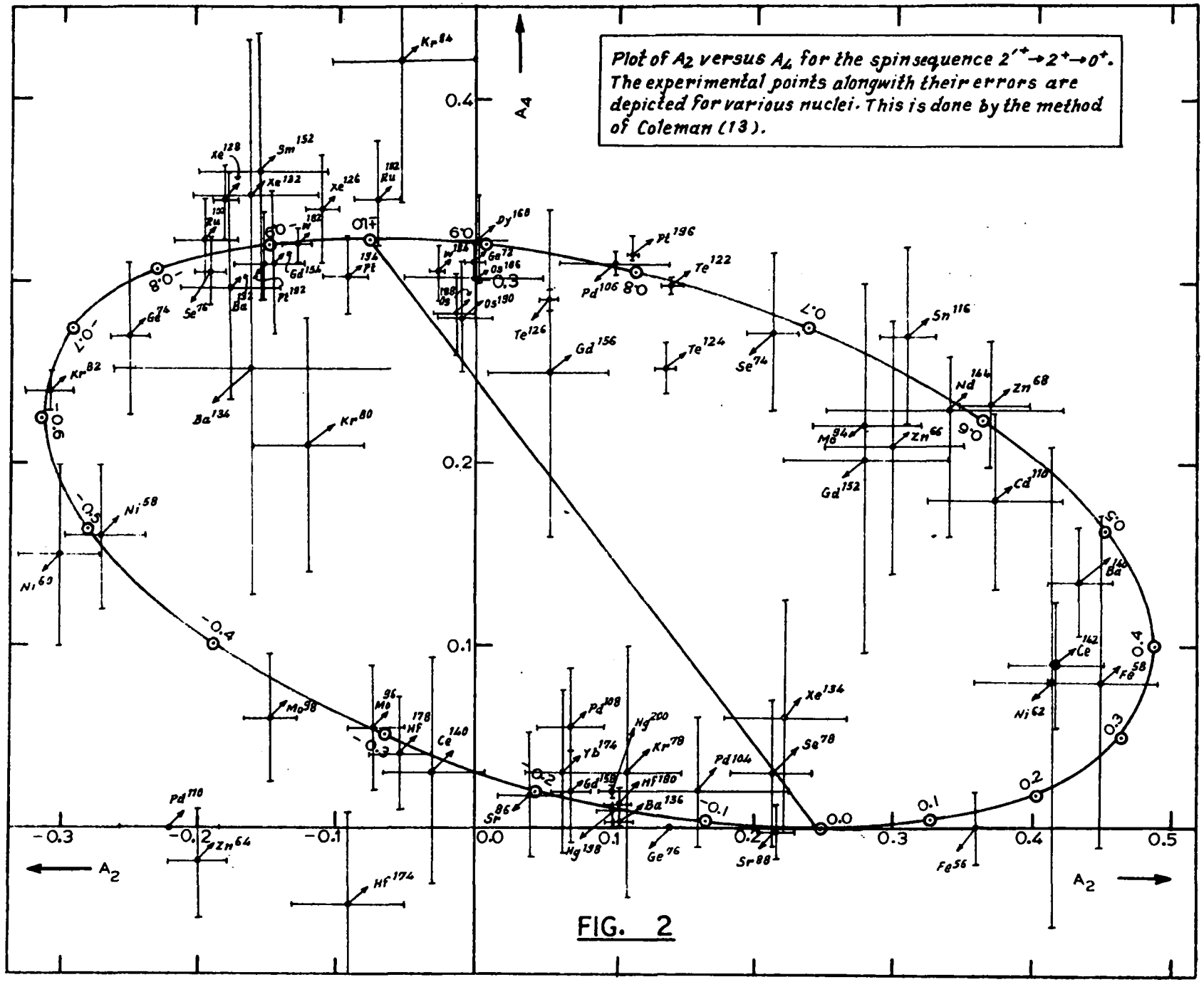
Plot of A_2 versus A_4 for the spinsequence $2'^+ \to 2^+ \to 0^+$. The experimental points alongwith their errors are depicted for various nuclei. This is done by the method of Coleman (13).
A_4
A_2
A_2
0.4
0.2
0.1
-0.3
-0.2
-0.1
0.0
0.1
0.2
0.3
0.4
0.5

FIG. 2

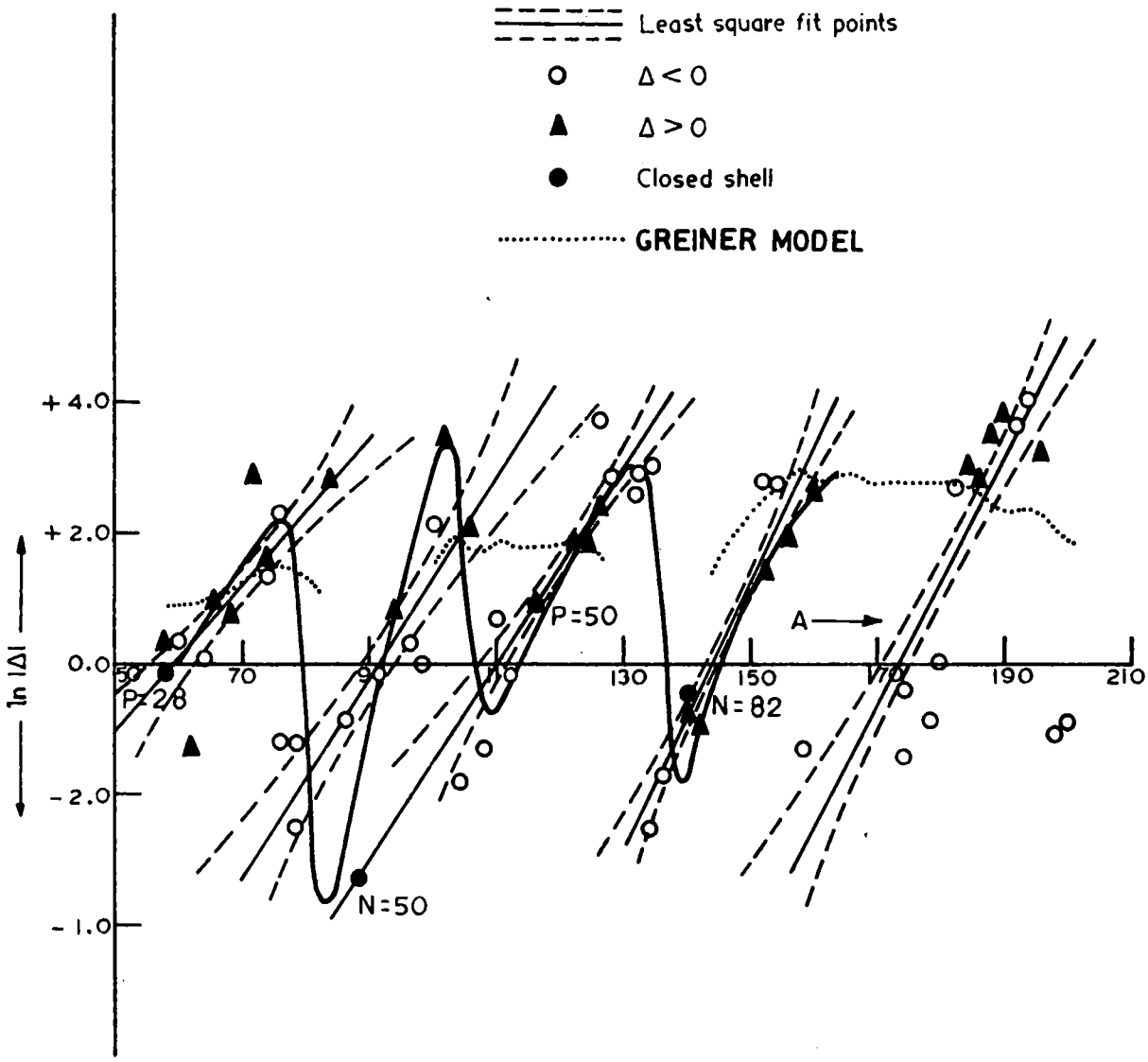

Plot of ln|Δ| [≡ δ/Eγ, where Eγ is the gamma-ray energy] versus mass number (A). The solid curve indicates the trend of measured values as given by Krane [4] whereas calculations through Greiner's model [5] are represented by dotts. The straight lines obtained by the method of least square fit in order to divide in five groups are depicted by the solid lines and their errors by the broken lines.

FIG. 3

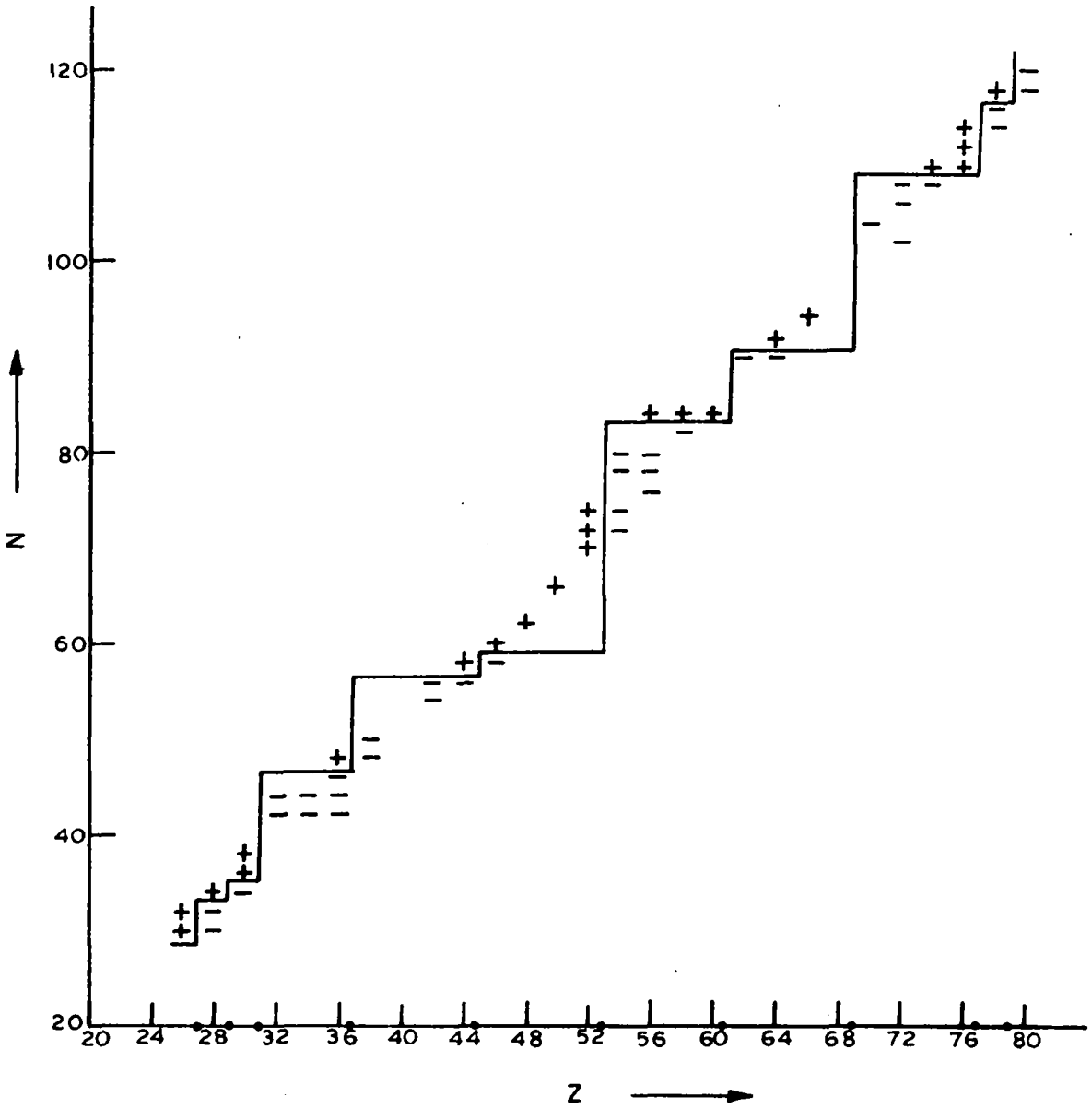

The phases of 'δ' are given for various nuclei by plotting 'Z' (atomic number) along X-axis and 'N' (Neutron number) along Y-axis.

FIG. 4

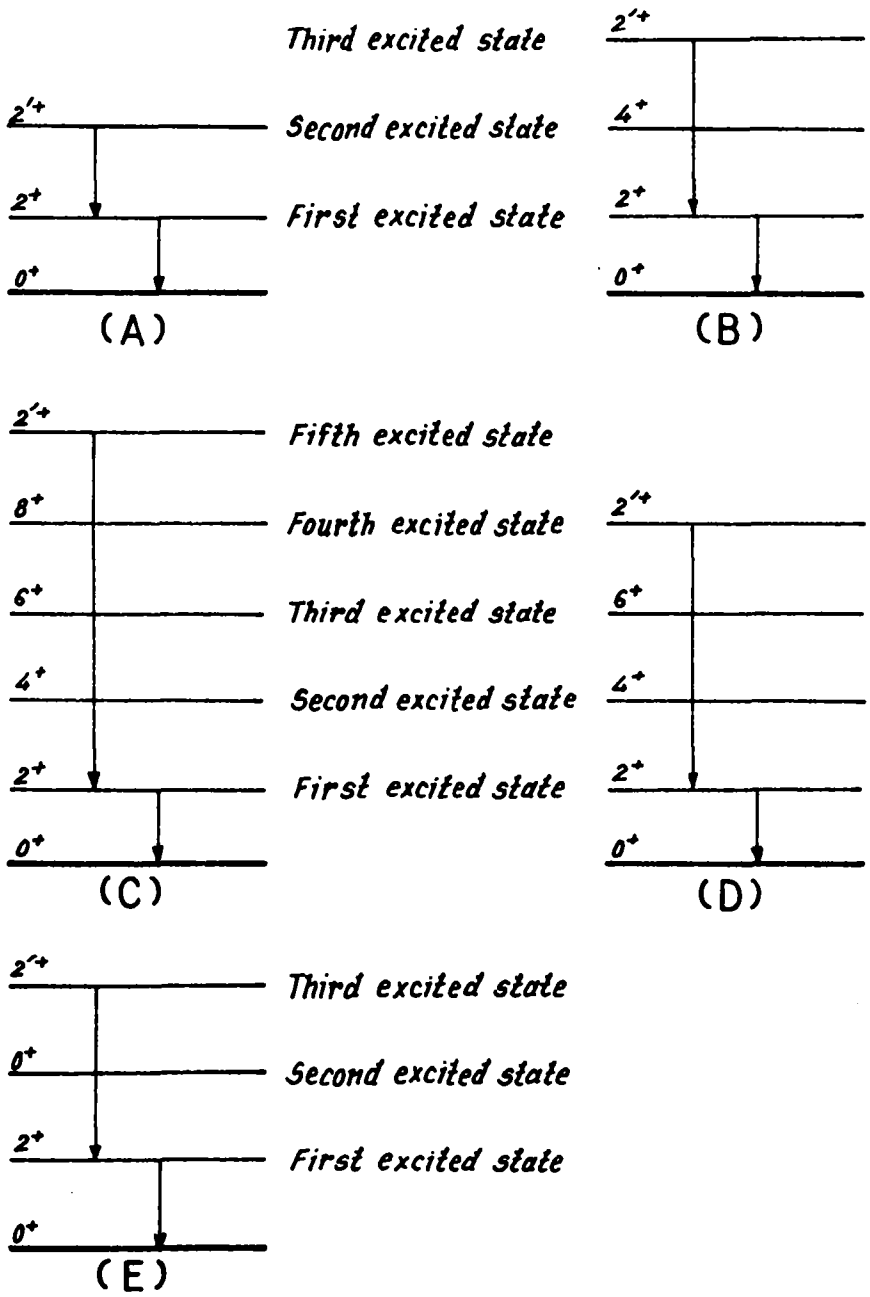

FIG. 5_ LOWEST EXCITED STATES OF EVEN-EVEN NUCLEI.