International Atomic Energy Agency

INDC(ISL)-005/G

INDC INTERNATIONAL NUCLEAR DATA COMMITTEE

NUCLEAR DATA AND LOW ENERGY NUCLEAR RESEARCH IN ISRAEL

Progress Report for 1980

By Shimon Yiftah
Soreq Nuclear Research Centre

July 1981

IAEA NUCLEAR DATA SECTION, WAGRAMERSTRASSE 5, A-1400 VIENNA

Reproduced by the IAEA in Austria
July 1981
81-3137

INDC(ISL)-005/G
LS-293

NUCLEAR DATA AND LOW ENERGY NUCLEAR RESEARCH IN ISRAEL

Progress Report for 1980

By Shimon Yiftah
Soreq Nuclear Research Centre

July 1981

C O N T E N T S

INTRODUCTION

The Israel Nuclear Data and Low Energy Nuclear Research relevant to the International Nuclear Data Committee was continued in the various institutions listed in previous Progress Reports (LS-270 for 1976, Ls-276 for 1977, LS-289 for 1978 and 1979).

Brief abstracts of the research done during 1980 are presented in the following pages.

---

* Reprinted from their annual reports

ISRAEL ATOMIC ENERGY COMMISSION*

ELASTIC AND NUCLEAR RAMAN SCATTERING OF PHOTONS[1]

R. Moreh

A systematic experimental study of the elastic and inelastic photon scattering processes was carried out using monoenergetic photons in the 5-11.4 MeV range obtained from neutron capture in V, Cr, Ni and Fe. The elastic coherent part consists of a superposition of four scattering processes: Rayleigh (R), Delbruck (D), nuclear Thomson (NT) and nuclear resonance (NR) scattering. To facilitate the comparison with theory, it was necessary to choose the experimental conditions in such a way that maximum isolation of the contribution of each scattering process is achieved. In this manner, the contributions of the NT scattering amplitudes were established by scattering E = 5.5 - 7.2 MeV photons from targets of C and Mg and good agreement with experiment was obtained[2]. The nuclear resonance scattering contribution was also studied after isolating its contribution in the giant dipole resonance region at 11.4 MeV (mostly in heavy nuclei) and down to energies below the (γ,n) reaction threshold. Further, the D scattering contribution was also isolated by working at forward angles ($\theta=1^{o}-75^{o}$) and strong evidence for the contribution of the real part of the D amplitudes was obtained[3]. Moreover, by using E = 1 - 3 MeV photons and working at $\theta \sim 1^{o}$, it was possible to isolate the contribution of R scattering. Again, good agreement with calculated cross sections was obtained[4]. The theoretical relative phases of the various scattering amplitudes were studied critically. Evidence for strong interference effects was obtained between NT and NR amplitudes[5], between D and R amplitudes and between NR and D amplitudes. Strong evidence for the contribution of Coulomb corrections to the D scattering amplitudes in U at E = 7.9 and 9.0 MeV was found[6]. In addition, the elastic and inelastic rotational nuclear Raman scattering from various deformed and spherical heavy nuclei were measured using E = 8.5 - 11.4 MeV and good agreement was found with the prediction of the simple rotator model of the giant dipole resonance[7]. Finally, quasimonochromatic photons in the range E = 14.4 - 16.6 MeV (obtained from the photon monochromator of the University of Illinois) were used to study the inelastic Raman scattering to the 2^{+}, γ-vibrational band head in ^{166}Er. The results for transitions to this branch were much smaller

* Reprinted from Annual Report - 1980

(by a factor ≈3 to 5) than the predictions of the dynamic collective model[8].

REFERENCES:

1. Moreh, R., in Nuclear Physics with Electromagnetic Interactions. Lecture Notes in Physics No. 108, Springer, Berlin, 1979, pp. 276-287.
2. Berant, Z., Moreh, R. and Kahane, S., Phys. Lett. 69B, 281 (1977)
3. Kahane, S., Shahal, O. and Moreh, R., Phys. Lett. 66B, 229 (1977)
4. Kahane, S., Moreh, R. and Shahal, O., in Neutron Capture γ-Ray Spectroscopy, Plenum Press, New York, 1979, p. 643.
5. Berant, Z. and Moreh, R., Phys. Lett. 66B, 229 (1977)
6. Kahane, S. and Moreh, R., Nucl. Phys. A308, 88 (1978)
7. Bar-Noy, T. and Moreh, R., Nucl. Phys. A288, 192 (1977)
8. Nathan, A. M. and Moreh, R., Phys. Lett. 91B, 38 (1980)

INADEQUACY OF THE DYNAMIC COLLECTIVE MODEL IN DESCRIBING INELASTIC PHOTON SCATTERING IN ^{166}Er[1]

A. M. Nathan* and R. Moreh

Quasi-monochromatic photons in the range E_γ = 14.4 - 16.6 MeV were used to study inelastic scattering to the 2^+, γ-vibrational band head in ^{166}Er. The results for transitions to this branch are drastically smaller (by a factor ≈3-5) than the predictions of the dynamic collective model[2].

REFERENCES:

1. Nathan, A. M. and Moreh, R., Phys. Lett. 91B, 38 (1980)
2. Arenhorel, H., Danos, M. and Greiner, W., Phys. Rev. 157, 1109 (1967)

GAMMA-RAY WIDTHS IN ^{15}N [1]

R. Moreh, W. C. Sellyey* and R. Vodhanel*

The ground-state radiative widths of nine levels below 10.2 MeV in ^{15}N were measured using resonance fluorescence. The bremsstrahlung photon source was obtained from an electron linear accelerator. The results were compared with various theoretical predictions and found to agree best with very recent unpublished calculations in which the full $1\hbar\omega$ configurational basis is included in constructing the wave functions of the ^{15}N levels (see Table 1).

*University of Illinois at Urbana-Champaign, Urbana, IL

TABLE 1

Measured widths and excitation energies in ^{15}N. The values of J^{π} and Γ_o/Γ were taken from Ref. 2

Ex (keV)	J^{π}	Present work		Theory	
		Γ_o (eV)	Γ_o/Γ %	Γ_o (3) (eV)	Γ_o (4) (eV)
6323±1	$\frac{3}{2}^-$	3.12±0.18	100	2.8	
7301±1	$\frac{3}{2}^+$	1.08±0.08	99.3±0.7	0.2	1.02
8310±4	$\frac{1}{2}^+$	0.3±0.2	79±2	0.005	0.26
8575±4	$\frac{3}{2}^+$	0.3±0.3	33±2	0.32	0.41
9048±1	$\frac{1}{2}^+$	1.2±0.2	92±2	2.6	0.78
9150±1	$\frac{3}{2}^-$	0.47±0.12	100		
9760±1	$\frac{5}{2}^-$	0.21±0.07	81.5±3	0.004	
9924±1	$\frac{3}{2}^-$	1.6±0.2	77.6±2	1.12	
10064±1	$\frac{3}{2}^+$	6.3±0.4	96.0±0.7	0.11	5.5

REFERENCES:

1. Moreh, R., Sellyey, W. C. and Vodhanel, R., Phys. Rev. C. 23, 988 (1981)
2. Ajzenberg-Selore, F., Nucl. Phys. A268, 1 (1976)
3. Lie, S. and Engeland, T., Nucl. Phys. A267, 123 (1976)
4. Millener, D. J., to be published.

EFFECT OF MOLECULAR ORIENTATION ON THE NUCLEAR PHOTON SCATTERING FROM ^{11}B (1)

R. Moreh, W. C. Sellyey* and R. Vodhanel*

The dependence of resonance scattered photon intensities on the molecular orientation(2) of the target was observed using bremsstrahlung photons obtained from an electron linear accelerator. This was achieved

* University of Illinois at Urbana-Champaign, Urbana, IL

in a self-absorption measurement by employing a ^{11}B target in the form of pyrolytic boron nitride.

REFERENCES:

1. Moreh, R., Sellyey, W. C. and Vidhanel, R., Phys. Lett. 92B, 286 (1980)
2. Shahal, O. and Moreh, R., Phys. Rev. Lett. 40, 1714 (1978)

INTERFERENCE EFFECTS BETWEEN E1, E2 RESONANCES IN THE $^{206,\ 207}Pb(\gamma,n)$ REACTION[1]

Y. Birenbaum, Z. Berant, S. Kahane, R. Moreh and A. Wolf

A systematic study of the (γ,n) reaction in lead isotopes is currently in progress at our laboratory. Monoenergetic ($\Delta E \approx 20$ eV) photons in the energy range 7-11.4 MeV were produced by thermal neutron capture in nickel and chromium disks placed near the core of the IRR-2 reactor. The photoneutrons were detected in a high resolution ^{3}He detector placed on a movable arm 20 cm from the target position. Eleven angles between 40°-140° were measured. The good energy resolution (about 30 keV at 1 MeV) permitted measurement of angular distributions of neutron groups leading to ground state and various excited states in the residual nucleus.

In Fig. 1 we present the a_1/a_0 coefficients of the Legendre polynomials for the $^{207}Pb(\gamma,n_0)$ reaction and the previous[2] results for $^{206}Pb(\gamma,n_{0+1})$. In both cases non-zero values of a_1/a_0 and a_3/a_0 were obtained, indicating the existence of E1-E2 and, possibly, E1-M1 interference effects. The solid lines were obtained from calculations based on the direct-semidirect model[3]. The lines marked $5/2^-$, $1/2^-$ correspond to calculations for the transitions to the ground state and first excited 2.3 keV state in ^{205}Pb, which could not be resolved energetically.

The calculations made here for $^{206}Pb(\gamma,n)$ are closer to the experimental data than the previous ones[2]. A possible reason is the introduction of a complex volume form factor for the particle-vibration coupling[4]. The results for $^{207}Pb(\gamma,n_0)$ follow the general trend predicted by the calculations, although more experimental data are needed to reach more definite conclusions.

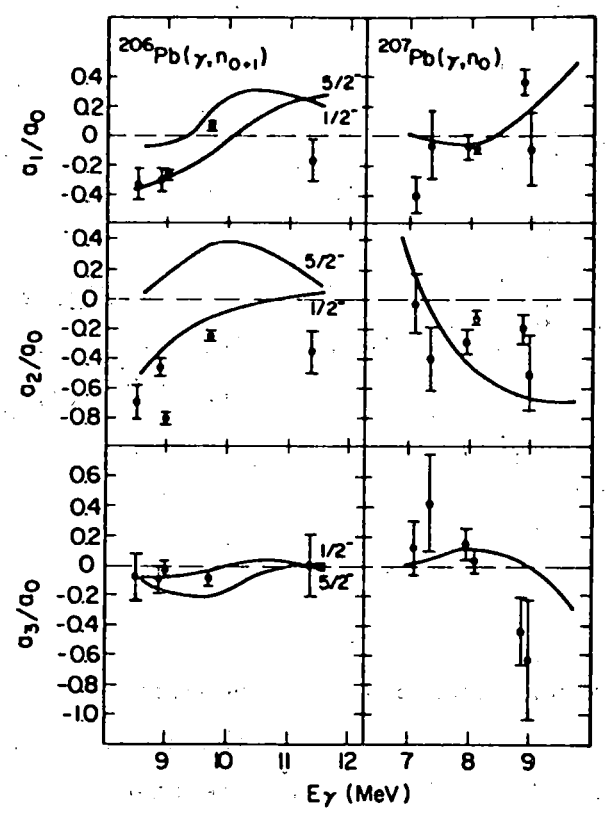

Fig. 1

Angular distribution coefficients a_i/a_0 for the $^{206}Pb(\gamma,n_{0+1})$ and $^{207}Pb(\gamma,n_0)$ reactions

REFERENCES:

1. Birenbaum, Y., Berant, Z., Kahane, S., Moreh, R. and Wolf, A., presented at International Conference on Nuclear Physics, Berkeley, 1980.
2. Birenbaum, Y., Berant, Z. and Wolf, A., Phys. Lett. 88B, 239 (1979)
3. Brown, G. E., Nucl. Phys. 57, 339 (1964)
4. Potokar, M., Phys. Lett. 46B, 346 (1973)

ANGULAR DISTRIBUTIONS OF PHOTONEUTRONS FROM THE $^{208}Pb(\gamma,n_0)$ REACTION

Y. Birenbaum, Z. Berant, S. Kahane, R. Moreh and A. Wolf

Angular distributions of photoneutrons from the $^{208}Pb(\gamma,n_0)$ reaction were measured at several incident energies between 8.5-11.4 MeV, using neutron-capture gamma rays and a high resolution ^3He spectrometer. A pronounced asymmetry around 90° was observed at several energies (Fig. 2). At 11.4 MeV the angular distribution is symmetric around 90° and the value of $a_2 = -0.8$ indicates pure E1 absorption.

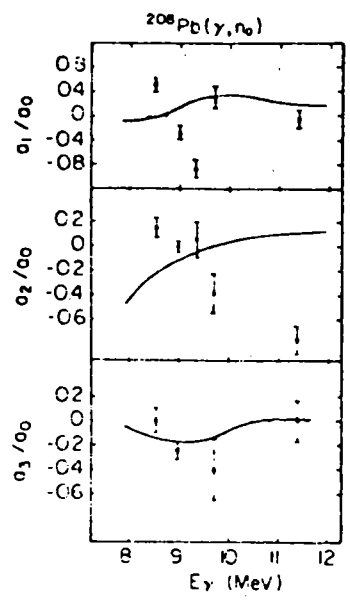

Fig. 2
Angular distribution coefficients a_1/a_0 for the $^{208}Pb(\gamma,n_0)$ reaction

Theoretical calculations based on the direct-semidirect model[1] are presented as solid lines in Fig. 2. These calculations take into account interference between the E1 giant resonance and the isoscalar giant E2 resonance. The experimental values of a_3/a_o follow quite closely the trend predicted by the calculations. This is evidence for the existence of E1-E2 interference. However, large deviations from the calculations occur for a_1/a_o and a_2/a_o. The existence of E1-M1 interference, due to the presence of some narrow M1 states in ^{208}Pb may be responsible for the large fluctuations in a_1/a_o. On the other hand, the regular behavior of a_2/a_o and its systematic deviation from the theoretical calculations indicate that the direct-semidirect model does not correctly describe the giant dipole resonance in ^{208}Pb.

REFERENCE:

1. Clement, C. F., Lare, A. M. and Rook, J. R., Nucl. Phys. 66, 273 (1965)

STUDY OF DEBYE TEMPERATURES OF Mg_2Ni, Mg_2NiH_4 and Mg_2NiD_4 USING NUCLEAR RESONANT SCATTERING OF GAMMA RAYS[1]

I. Jacob*, M. H. Mintz, O. Shahal and A. Wolf

It was shown that the technique of nuclear resonance scattering of gamma rays can be used to obtain information on Debye temperatures

*Ben-Gurion University of the Negev, Beer-Sheva

of metal hydrides. A significant increase of θ_D of the Ni atoms and an isotopic effect were observed for hydrogenated and deuterated Mg_2Ni. The results were considered in relation to the electron-phonon interaction, the crystallographic structure and the interactions between neighboring atoms.

REFERENCE:

1. Jacob, I., Mintz, M. H., Shahal, O. and Wolf, A., Phys. Lett. A, in press.

MAGNETIC MOMENT OF THE FIRST EXCITED 2^+ STATE IN ^{100}Zr[1]

A. Wolf, G. Battistuzzi*, K. Kawade*, H. Lawin* and K. Sistemich*

The magnetic moment of the first excited 2^+ state of ^{100}Zr was measured using the integral perturbed angular correlation technique. The experiment was performed at the gas-filled fission product separator JOSEF[2]. A beam of fission fragments containing ^{100}Y (the parent of ^{100}Zr) was obtained wihin 2 μsec after fission. The radionuclei were transferred to the counting position between the pole tips of an electromagnet with an air-jet transport system. The applied magnetic field was 30.7±0.5 kG. Three true coaxial Ge(Li) detectors were used at a distance of about 10 cm from the source, and operated in two γ-γ coincidence pairs at angles of 210° and 330°.

The precession angle of the correlation was found to be $\Delta\theta$ = 33.5±7.5 mrad, and the deduced g-factor:

$$g(2_1^+) = 0.22 \pm 0.05$$

This value of $g(2_1^+)$ is consistent with a collective description of the 2_1^+ state in ^{100}Zr. Moreover, the value of g reported here is intermediate between small, negative $g(2_1^+)$ values in $^{92,94}Zr$, and the large $g \sim Z/A = 0.4$ predicted by the hydrodynamical model. This may be considered as further experimental evidence for the onset of deformation in ^{100}Zr.

REFERENCES:

1. Wolf, A., Battistuzzi, G., Kawade, K., Lawin, H. and Sistemich, K., Phys. Lett. B97, 195 (1980)
2. Lawin, H. et al., Nucl. Instrum. Methods 137, 103 (1976)

*Inst. fur Kernphysik, KFA, Julich, Germany

NUCLEAR STRUCTURE STUDIES OF ^{145}Ba

M. S. Rapaport, G. Engler and A. Gayer

Studies of the decay of mass separated isotopes with A=145 were conducted at the Soreq on-line isotope separator (SOLIS). In particular, the nuclear structure of ^{145}Ba was studied through the β-decay of ^{145}Cs. This neutron-rich barium isotope is of special interest because it is located in the transitional region between the regions of spherical and deformed nuclei[1]. To date no information on its nuclear structure has been reported in the literature.

The SOLIS facility incorporates a surface ionization, integrated target-ion-source with a ^{235}U target exposed to a thermal neutron flux of $5x10^8$ n cm sec^{-1}. The decay chain was entered through Cs isotopes and mass-separated radioactive beams were collected on aluminum-coated Mylar tape. Figure 3 shows the γ-spectrum resulting from the β-decay

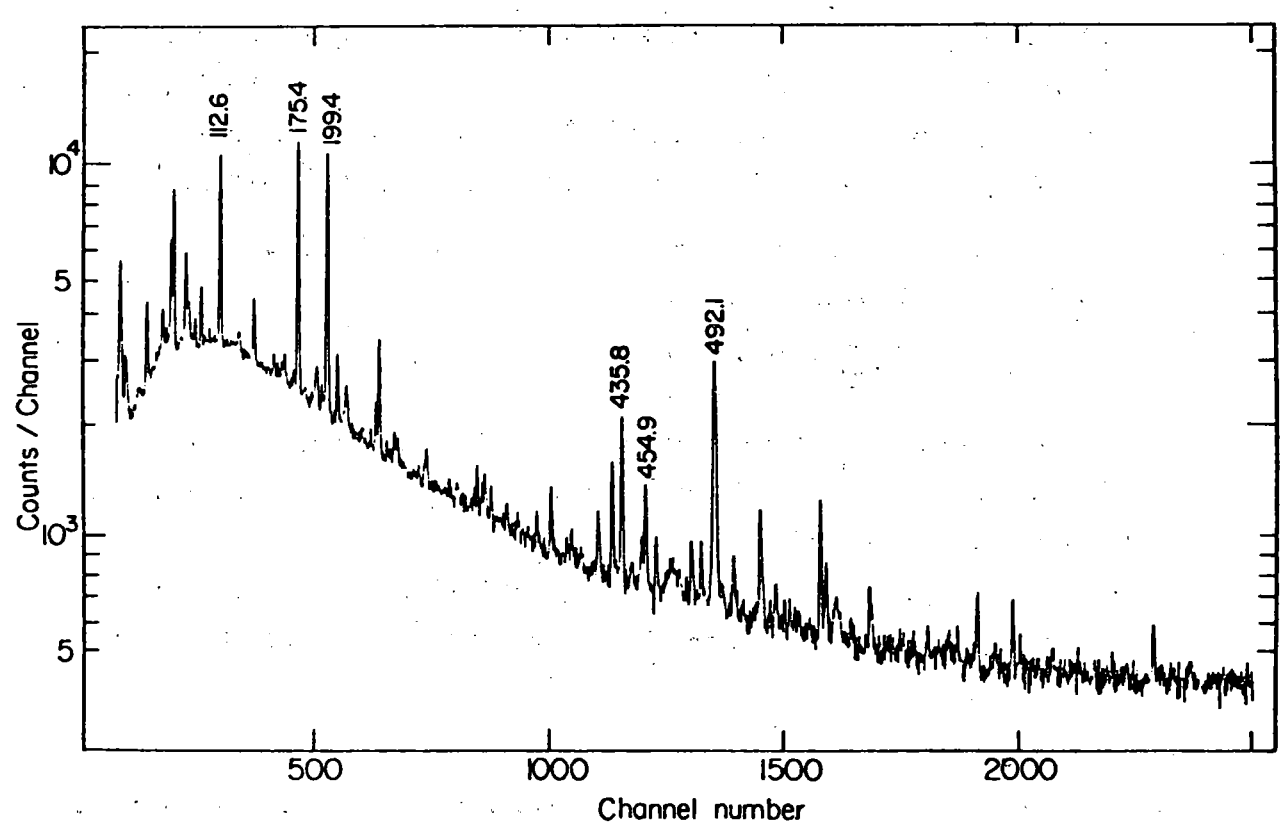

Fig. 3
Gamma ray spectrum following ^{145}Cs β decay

of ^{145}Cs ($t_{\frac{1}{2}}$ = 0.59 sec) to levels in ^{145}Ba. This spectrum was obtained by simultaneously collecting and recording, for 2 sec, more than a thousand radioactive sources. The major γ-lines belonging to ^{145}Cs decay were identified.

REFERENCE:

1. Scott, S. M., Hamilton, W. D., Hungerford, P., Warner, D. D., Jung, G., Wunch, K. D. and Pfeiffer, B., J. Phys. G6, 1291 (1980)

MEASUREMENTS OF Br AND I ISOTOPES WITH A NEGATIVE SURFACE IONIZATION ION SOURCE

G. Engler, M. S. Rapaport and Y. Yoresh

A negative surface ionization ion source was developed for studying thermal neutron fission of ^{235}U at the SOLIS on-line isotope separator[1]. Delay half-time measurements and beta activity scans of Br and I were performed with the source at target temperatures of ∿2300°C and ionizer temperatures of ∿1100°C. Beta activity build-up was measured at the collector using a 300 μm Si surface barrier detector. Delay half-times were then calculated by performing least-squares fits of theoretical growth curves to the experimental data, as explained in Ref. 2. Delay half-times of 30±7 sec and 10±5 sec for Br and I, respectively, were obtained.

Preliminary beta activity scans for the above working conditions for $^{87-90}Br$ and $^{138-141}I$ are shown in Figs. 4 and 5, respectively.

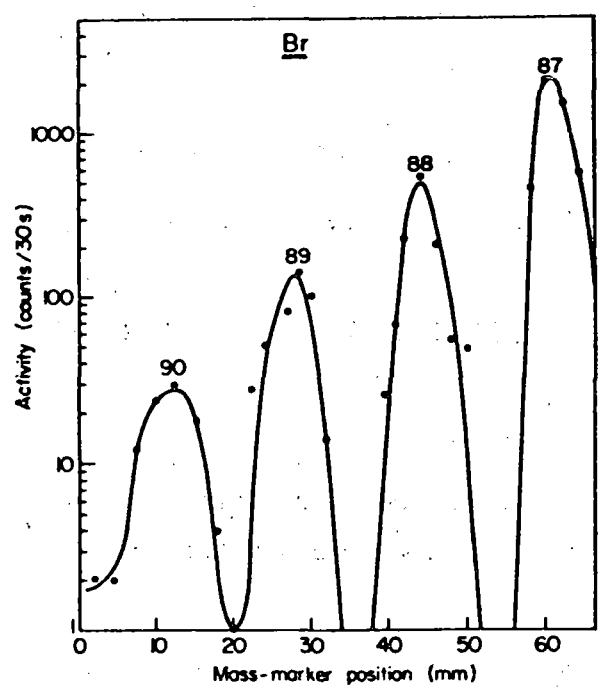

Fig. 4
Beta activity scan for $^{87-90}Br$

The scans demonstrate that with the present source configuration, delay times and efficiencies, masses as far from the beta stability line as ^{90}Br and ^{141}I were separated, which means that isotopes with half-lives down to about 0.4 sec could be reached. The rather long delay half-times cause the low counting rates and limit the half-lives that can be reached. It is envisaged that source improvement could bring this limit down. The source could be improved by optimizing the size and shape of the LaB_6 ionizer and by improving the extraction geometry. This would then allow studies of isotopes of Br and I still further removed from the beta stability line.

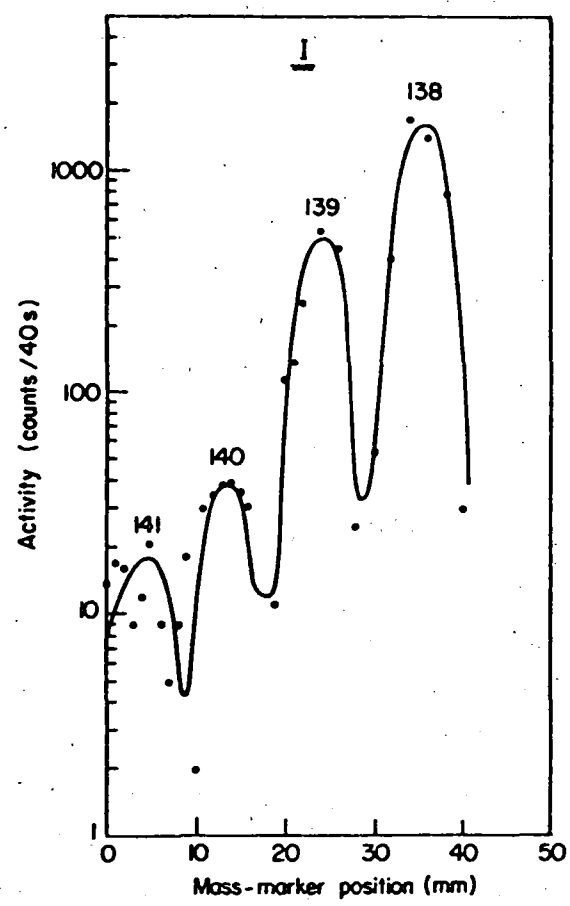

Fig. 5
Beta activity scan for $^{138-141}I$

REFERENCES:

1. Shmid, M., Skurnik, E., Engler, G. and Amiel, S., in IA-1348, 1978, p. 243.
2. Amiel, S., Engler, G., Nir-El, Y. and Shmid, M., Nucl. Instrum. Methods 139, 305 (1976)

CROSS CONTAMINATION OF MASSES IN THE INTEGRATED TARGET-ION-SOURCE FOR THE SOLIS

G. Engler, M. S. Rapaport, E. Skurnik* and I. Yoresh

Contamination of masses being analyzed with isotopes of lower mass was observed at the SOLIS on-line isotope separator, e.g. ^{142}Cs

*Weizmann Institute of Science, Rehovot

contamination in ^{145}Cs, and led to complications in the analysis of γ-ray spectroscopic data. The contamination was found to be caused by the specific construction and electrical potential configuration of the SOLIS ion source[1,2].

The SOLIS ion source consists basically of a target assembly, which is a graphite matrix held in a tantalum container, and a Ta or Re ionizer. Since the target is heated to high temperature by electron bombardment, whereas separate low voltage joule heating is applied to the ionizer, there is a voltage difference between the target assembly and the ionizer. Typical electrical connections and operating values of the arrangement are shown diagrammatically in Fig. 6a. Here the potential difference between the target and the ionizer is 1000 V, which is the voltage applied for electron bombardment.

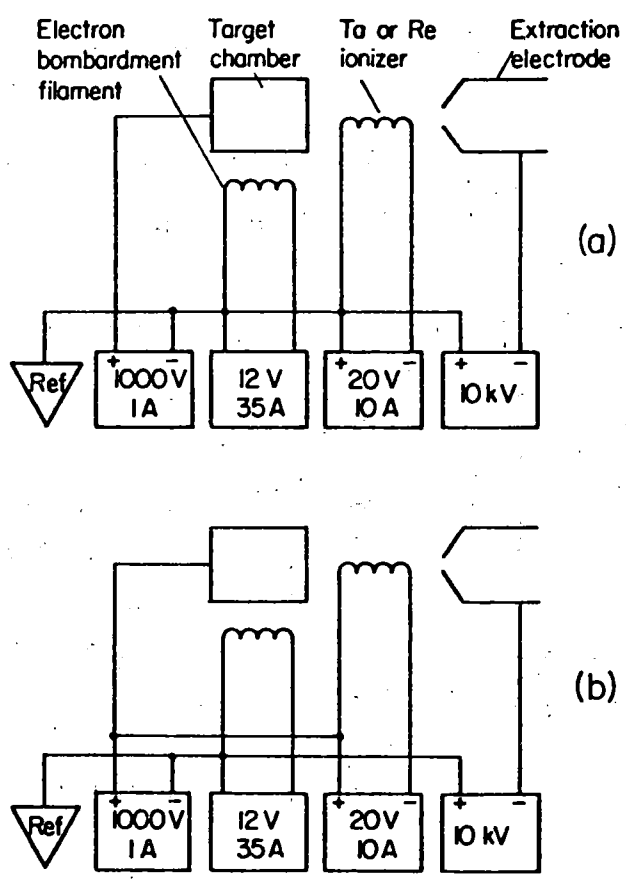

Fig. 6

Schematic diagram of the electrical connections of the SOLIS ion source
a) target and ionizer at different potentials
b) target and ionizer at a common potential

Atoms are ionized on the hot surfaces of both the target and the ionizer. There is a certain probability that ions originating in the target will pass via the ionizer assembly and be extracted into the separator. Due to the difference in the potential between the target and the ionizer, ions with lower masses originating from the target are deposited at the collector at the same position as ions with higher masses originating from the ionizer. The effect gives rise to contamination of the desired mass with lower masses.

The contamination was eliminated by connecting both the target and the ionizer to a common potential. The modified electrical configuration is shown in Fig. 6b. The contamination effect observed in the SOLIS raises a general problem, i.e. the possibility that ions originate from more than one ionizing surface within the source. It is important to keep this in mind when constructing new types of integrated surface ionization target-ion-sources.

REFERENCES:

1. Amiel, S., Engler, G., Nir-El, Y. and Shmid, M., Nucl. Instrum. Methods 139, 305 (1976)
2. Shmid, M., Nir-El, Y., Engler, G. and Amiel, S., Nucl. Instrum. Methods 144, 601 (1977)

LEVELS OF ^{230}Ac AND ^{230}Th POPULATED BY DECAY OF ^{230}Ra AND ^{230}Ac[1]

J. Gilat, S. Katcoff* and L. K. Peker*

Decay schemes, based on γ-ray and β-ray spectroscopy, were proposed for 93-min ^{230}Ra and 122-sec ^{230}Ac. Of 48 observed γ transitions following decay of ^{230}Ra, 39 were accommodated among 19 levels in ^{230}Ac. For decay of the ^{230}Ac, 135 γ transitions were observed and 98 were accounted for among 46 levels (22 known previously) in ^{230}Th. The ground state of $^{230}_{89}Ac_{141}$ was assigned $I^{\pi}=K^{\pi}=1^{+}$. A number of levels were discussed in terms of Nilsson orbital assignments, Q_{β} = 0.71 MeV for ^{230}Ra and Q_{β} = 2.70 MeV for ^{230}Ac.

REFERENCE:

1. Gilat, J., Katcoff, S. and Peker, L. K., Phys. Rev. C21, 2041 (1980)

*Brookhaven National Laboratory, Upton, New York

MONTE-CARLO CALCULATIONS OF GAMMA-RAY BACKSCATTERING [1]

A. Gayer, S. Bukshpan and E. Nardi

Monte Carlo methods were applied to obtain a realistic picture of the behavior of backscattered γ-ray flux. Backscattered flux was calculated for primary γ-ray energies in the range 0.1-1.3 MeV, for scatterer atomic number $6 \leq Z \leq 50$ and for different geometrical configurations of source and detector. Special emphasis was put on the problem of detection of radiation scattered from a small scattering volume within the bulk material.

The curves for the backscattered γ-ray flux exhibit well defined maxima, preceeded by a steep increase and followed by a smooth decrease, in agreement with the corresponding behavior of the photoelectric and Compton cross sections.

Inclusion of multiple scatterings in the calculations shows that the depth limit of applicability of the narrow beam geometry backscattering method is essentially energy independent. The depth limit decreases with increasing material atomic number.

REFERENCE:

1. Gayer, A., Bukshpan, S. and Nardi, E., Nucl. Instrum. Methods, in press.

IN-SITU DENSITY MEASUREMENT IN AQUEOUS SOLUTIONS BY THE GAMMA-RAY BACKSCATTERING METHOD

A. Gayer, S. Bukshpan and D. Kedem

The possible application of the γ-ray backscattering method for in-situ measurement of the density profile in aqueous solutions was studied experimentally, following Monte Carlo calculations. Experiments and calculations were performed for two γ-ray sources, ^{241}Am and ^{192}Ir, and for two salt solutions, NaCl and KBr, in the density range 1.00-1.22 g/cm^3. Optimal geometric configurations were derived for each γ-ray source by the Monte Carlo calculations. The results show that the method is feasible and it is marked by a simple exponential response for both sources.

The use of an ^{241}Am source results in strong dependence on the type of salt and hence cannot be used in solutions of unknown or changing salt composition. However for constant composition, the

technique with a low energy γ-ray source has a high sensitivity and calibration is easy. In this sense the backscattering method is superior to the γ-ray transmission method, where the response is more complex because the mass attenuation coefficients of salt aqueous solutions are density dependent.

By using a high γ-ray source in the region of the ^{192}Ir spectrum, the salt-type effect is almost eliminated and amounts to a maximum of 3% for the measured salts. Hence it can be expected that the salt-type effect will be less than 1% for measurements in a solar pond or ocean where salt composition is fairly uniform.

REACTOR THERMAL NEUTRON FLUX MONITORING WITH RHENIUM FOILS AT HIGH TEMPERATURE IN ON-LINE ISOTOPE SEPARATION

N. Lavi

The feasibility of applying rhenium as a thermal neutron flux monitor at high temperature in on-line isotope separation was investigated experimentally. Measurements of the integrated flux take into consideration the fluctuations in the thermal neutron flux during the irradiation of the ion source. The integrated thermal neutron flux was calculated from the absolute activity of ^{188}Re and measured with a calibrated Ge(Li) detector. Good results were obtained at temperatures in the region of 1800°C.

REFERENCE:

1. Lavi, N., Nucl. Instrum. Methods, in press.

VALIDATION OF THE WIMS-D CLUSTER OPTION

A. D. Krumbein and M. Caner

The WIMS-D[1] lattice code, which is used to obtain cell averaged cross sections for overall reactor calculations, has a cluster option which can be used to describe an entire fuel rod cluster. In order to make sure that the option operates properly in the code version in our possession, comparisons were made with critical experiments performed for both ThO_2 and UO_2 clusters. These assemblies were D_2O moderated and had either D_2O or H_2O as the coolant. Our results were also compared with calculations made at other facilities[2,3] using both transport and Monte Carlo programs.

The 19 element ThO_2-$^{235}UO_2$ lattice is described in Refs. 2 and 4. A pitch of 22 cm was used and comparisons were made of the fast fission ratio (^{232}Th fissions/^{235}U fissions) at 3 locations in the cluster as well as for the cluster average. The results are given in Table 1. Even though WIMS calculates an essentially infinite lattice of ThO_2-$^{235}UO_2$ elements, whereas the actual critical experiment had only 7 of these elements surrounded by 19-rod natural UO_2 CANDU elements, the comparison is quite good.

TABLE 1

Comparison of measured and calculated fast fission ratios for D_2O moderated clusters, 22 cm pitch

Cluster	Coolant	Ratio				
		Experiment	WIMS	KIM	ANISN	LATREP
1) 19-element ThO_2-$^{235}UO_2$	D_2O					
center pin		0.0102	0.0108	0.0112	0.0100	0.0113
inner ring		0.0092	0.0096	0.0097	0.0086	0.0090
outer ring		0.0061	0.0062	0.0065	0.0054	0.0066
cluster average		0.0071	0.0075	0.0075	0.0064	0.0074
2) 19-element ThO_2-$^{235}UO_2$	H_2O					
center pin		0.0116	0.0129		0.0094	0.0116
inner ring		0.0096	0.0106		0.0081	0.0092
outer ring		0.0060	0.0061		0.0050	0.0063
cluster average		0.0071	0.0079		0.0059	0.0073
3) 7-rod UO_2	D_2O					
cluster average		0.0550	0.0520			0.0571

The results of calculations for the 7 rod UO_2 fuel cluster described in Ref. 3 are also given in Table 1. Here also a 22 cm pitch was used and D_2O was both the moderator and coolant. As can be seen the results for the fast fission ratio (^{238}U fissions/^{235}U fissions) are in reasonable agreement with those obtained experimentally.

REFERENCES:

1. Askew, J. R., Fayers, F. J. and Kemshell, P. B., J. Brit. Nucl. Energy Soc. 5, 564 (1966).
2. Casali, F. and Marinucci, M., CNEN-RT/FI(80)9, 1980.
3. Green, R. et al., AECL-2025, 1964
4. Okazaki, A., AECL-2779, 1968.

WIMS LIBRARY UPDATED[1]†

Y. Gur, M. Caner and S. Yiftah

The WIMS library[2] contains effective, self-shielded, temperature dependent fission and capture cross sections, in the resonance region for some 8 out of 100 isotopes. For the rest (among which, in our version, are Pu-240 and Pu-241) only infinitely diluted group cross sections are given. We updated the library by inserting ENDF/B-IV based self-shielded cross sections for all fissile and fertile isotopes in the resonance region. Infinitely diluted cross sections were computed for the WIMS group structure, from ENDF/B-IV data by NANICK[3]. These were combined with self-shielding factors computed by a modified version of NASIF[4] into effective, temperature dependent (300, 600 and 900K) fission and capture cross sections for Th-232, Pa-233, U-233, U-235, U-238, Pu-239, Pu-240, Pu-241 in the WIMS library format. An editing program replaced the original WIMS data by the ENDF/B-IV data computed here.

Our method of generating the group constants using NANICK and NASIF is consistent with the WIMS method of generating group constants using SDR. Our cross sections for Pu-239 have about the same values and show the same temperature dependence as the original WIMS cross sections.

Preliminary test runs of Pu-240, 241 data of a cylindrical cell, having 0.5 cm radius Pu surrounded by a 0.2 cm ring of water, showed an increase in k_∞ of the cell compared with calculated values obtained for the same cell with the original WIMS data. A 2.7% increase in k_∞ was found when the Pu was 100% Pu-240, and was found to be due to sub-threshold fission of Pu-240 detected in 1968. A 0.3% increase was found when the Pu was 95% Pu-239 and 5% Pu-241. Original WIMS data were used for Pu-239 in both runs.

REFERENCES:

1. Gur, Y., Caner, M. and Yiftah, S., in Trans. Nucl. Soc. Israel, vol. 8, 1980, p. 251

---

†This work was partially sponsored by the Nuclear Engineering Department of Ben-Gurion University of the Negev, Beer-Sheva.

2. Kowalska, K., The S-WIMS Code, Distributed by NEANDC.
3. Gur, Y., TNSD-R/419, 1971 Appendix 5
4. Gur, Y. and Yiftah, S., IA-1292, 1973

SENSITIVITY OF COMPUTED INTEGRAL PARAMETERS OF A FAST REACTOR TO DIFFERENCES BETWEEN ENDF/B-V AND SOKRATOR FISSION CROSS SECTIONS OF ^{235}U(1)

Y. Gur and S. Yiftah

The differences between the American ENDF/B-V and the Russian SOKRATOR nuclear data files for ^{235}U fission range from 0.1% to 3% in the energy range above 10 keV and from 1% to 40% in the energy range below 10 keV. These differences were considered as a measure of the uncertainties in the cross sections, and their influence on computed integral parameters of ZPR 6-6A was studied.

ZPR 6-6A is a large (3100 ℓ) enriched uranium oxide fueled critical assembly with a soft spectrum and other characteristics representative of several LMFBR designs. The core is blanketed with depleted uranium, and the fertile-to-fissile ratio is 5.1. Infinitely diluted cross sections of ENDF/B-V and SOKRATOR were computed by NANICK(2). The relative differences $\delta = (S-E)/E$ (where S is the SOKRATOR value and E is the ENDF/B-V value) were computed and served as input for SENTIN(3). SENTIN computes the changes in integral parameters of benchmarks due to changes in the cross sections, using the RSIC package DLC 45/B, SENPRO(4).

The impact on k_{eff} due to differences in σ_f(U-235) below and above 10 keV was found to be 2.20% and 2.04%, respectively. Similarly the effect on the "breeding ratio" $^{238}U_c/^{235}U_f$ due to differences below and above 10 keV was found to be -4.18% and -3.86%, respectively.

REFERENCES:

1. Gur, Y. and Yiftah, S., in Trans. Nucl. Soc. Israel, vol. 8, 1980 p. 20
2. Gur, Y., TNSD-R/419 Appendix 5, 1971
3. Gur, Y., "SENTIN - A Program for the Computation of Changes in Integral Parameters of Benchmarks Due to Changes in the Cross Sections Using Sensitivity Profiles", to be published
4. SENPRO, RSIC Data Library Collection DLC-45/B, 1978.

IMPACT OF DIFFERENCES BETWEEN ENDF/B-IV AND SOKRATOR NUCLEAR DATA FOR Pu-239 UPON COMPUTED INTEGRAL DATA OF NUCLEAR SYSTEMS[1]

Y. Gur and S. Yiftah

Intercomparison of nuclear data evaluation should contain four levels[2]: (a) comparison of input, (b) intercomparison of evaluated data, (c) sensitivity analysis of the importance of differences, and (d) feedback to and from evaluators, with recommendations for measurements. In this work a preliminary sensitivity analysis of the impact of differences between ENDF/B-IV and SOKRATOR σ_f and σ_c of ^{239}Pu on k_{eff} and "breeding ratio" ($^{238}U_c/^{239}Pu_c$) of three ZPR systems was given as an illustration of (c) above.

Infinitely diluted multigroup cross sections were computed by NANICK[3]. The relative differences, $\delta = (S-E)/E$, where S is the SOKRATOR value and E is the ENDF/B-IV value, served as input to SENTIN[4], which computes the changes in integral parameters of benchmarks due to changes in cross sections, using the RSIC package DLC-42/B SENPRO[5]. The ANL sensitivity files[6,7] for three ZPR systems were used in this study.

Sensitivity of k_{eff} and "breeding ratio", $^{238}U_c/^{239}Pu_f$, to the relative differences between SOKRATOR and ENDF/B-IV cross sections are given in Table 2. Checking the partial impacts of differences in fission and capture cross sections in 12 energy ranges on k_{eff} of ZPR 9-31, we noted that the impacts of fission cross section above 10 keV on the k_{eff} and on breeding ratio tend to compensate for the impacts below 10 keV, and that the impact of σ_f in the 9.119-183 keV region is more than -1% on k_{eff}.

A sensitivity analysis of file differences (a "level c" study), like the present one but on a larger scale, could be a basis for specific recommendations and feedback to the evaluations, and possibly even provide recommendations for measurements.

TABLE 2

Impact (%) of the differences of ^{239}Pu fission and capture cross sections on "breeding ratio" ($^{238}U_c/^{239}Pu_f$) and k_{eff}

	System	Fission		Capture	
		Impact below 10 keV	Impact above 10 keV	Impact below 10 keV	Impact above 10 keV
Breeding ratio	ZPR-67	-1.28	1.67	0.057	0.163
	ZPR 3-48	-1.03	1.29	0.038	0.201
	ZPR 9-31	-0.81	1.55	-0.076	0.199
k_{eff}	ZPR 6-7	0.707	-0.892	-0.641	0.064
	ZPR 3-48	0.507	-0.651	-0.544	0.0375
	ZPR 9-31	0.474	-0.798	-0.287	0.0413

REFERENCES:

1. Gur, Y. and Yiftah, S., in Trans. Nucl. Soc. Israel vol. 8, 1980, p. 22.
2. Yiftah, S., Caner, M. and Gur, Y., INDC(ISL)-3/GH, 1979
3. Gur, Y., TNSD-R/419 - Appendix 5, 1971
4. Gur, Y., SENTIN - A program for computation of changes in integral parameters of benchmarks due to changes in the cross sections using sensitivity profiles, to be published.
5. "SENPRO" - sensitivity profiles, RSIC data library collection, DLC - 45/B, 1978.
6. Bohn, E.M., Olson, I. K. and Freese, K.E., ZPR-TM-240, 1976.
7. McKnight, R.D. and Olson, I.K., ZPR-TM-280, 1976.

Cm-246 NEUTRON DATA EVALUATION*(1)

M. Caner, y. Bartal and S. Yiftah

An evaluation of ^{246}Cm neutron data was performed. All significant cross sections in the neutron energy range 10^{-3} to $15x16^{6}$ eV were considered.

The experimental data were complemented by spherical optical model and statistical theory calculations. The evaluated data were compared with those in the ENDF/B-V file.

REFERENCE:

1. Caner, M., Bartal, Y. and Yiftah, S., IA-1358, 1980

*This research was partly supported by the International Atomic Energy Agency (research contract 2060/R2/RB)

RESONANCE OVERLAP IN SHIELDING FACTORS COMPUTATION IN THE LOW UNRESOLVED RESONANCE REGION[1,2]

Y. Gur and S. Yiftah

The resonance region is divided into two subregions. In the lower, resolved resonance region, resonance parameters are given for each resonance. In the higher, unresolved region, where the cross section still shows a marked resonant structure, resonance parameters are not known for each resonance; thus only statistical values of the parameters are given.

A number of codes for effective cross section computation[3,4] compute the resonance self-shielding factor using simplified models assuming small overlap effects between resonances, which can be represented by an overlap correcting term. Our code, NASIF[5], uses Monte Carlo techniques in this region. It samples a ladder of pseudo resolved resonance parameters and includes overlap effects of up to 25 resonances when computing the self-shielding factors.

Calculations performed with the simplified model, using MIGROS[3], were compared with those performed with the same statistical parameters using NASIF[5]. It was found that shielding factors computed by MIGROS, were insensitive to temperature increases compared with values obtained by NASIF. This would cause the nuclear system to have a relatively smaller computed Doppler coefficient. The main contributor to this insensitivity was found to be the overlap correction term, so that assuming no overlap yields better results than including an approximated correction term. Nevertheless an exact computation by NASIF shows that the resonance overlap is important in shielding factor computation.

Work continues in searching for a reliable and economical method for computing shielding factors from statistical parameters. The method used in our program NARES[6] looks promising.

REFERENCES:

1. Gur, Y. and Yiftah, S., in Trans. Nucl. Soc. Israel, vol. 6, 1978, p. 12A
2. Gur, Y. and Yiftah, S., in Trans. Nucl. Soc. Israel, vol. 7, 1979, p. III-23
3. Broeders, I. and Kreig, B., KFK-2388, 1978.
4. Toppel, B.J., Rago, A. L. and O'Shea, D.M., ANL-7318, 1967
5. Gur, Y. and Yiftah, S., IA-1292, 1974
6. Gur, Y. and Segev, M., in Proceedings of the American Nuclear Society Winter Meeting, Washington D.C., 1974.

IMPROVEMENTS IN THE BURNUP CODE MINI

Y. Bartal and S. Yiftah

MINI is a diffusion-depletion code which we have adapted from the PFMP[1] (Penn State University PWR Fuel Management Package) code SCAR. The code solves the diffusion equation using the EQUIPOISE[2] method, and the power distribution obtained is used to update burnup distribution for the next depletion step. The code uses macroscopic cross sections which are represented as burnup and boron dependent polynomials. At each depletion step the code can calculate critical boron content which together with the updated burnup level, determines cross section values for that step.

Two major improvements were recently made in order to make the iterative calculation more efficient. The polynomial coefficient decks named ADD are stored on magnetic discs as a permanent library. In the old version of MINI these ADD are read and rewritten on the disc as a temporary file. This file is read again each time cross sections are needed, which means at each depletion step and at each criticality iteration. In order to eliminate these unnecessary I/O operations, the needed ADD are now read into fast memory only once, and retrieved from memory each time they are needed. The second improvement was the elimination of diffusion equation constants being recomputed at each iteration. This was done by storing all the needed constants in fast memory, so they only need to be retrieved at each iteration.

As a consequence of these changes, the code efficiency was increased by a factor of two. Further efficiency was gained by recompiling the code with a special version of the FORTRAN-H compiler with an optimizing level 3. A typical power reactor problem solution which used 452 CPU seconds in the old version of MINI, uses only 180 CPU seconds in the new one. The I/O operations were reduced by an order of magnitude, and the extra core region needed is only a few K-bytes. This is due to the compensating effect of reducing the number of I/O buffers needed.

REFERENCES:

1. Cenko, M. J., PSBR-315-497483, 1975
2. Tobias, M. and Fowler, T. B., Nucl. Sci. Eng. 12, 513 (1962)

TIME DEPENDENT BURNUP IN ONE AND TWO DIMENSIONS[1]

Y. Bartal and S. Yiftah

Conventional burnup calculations are based on successive application of a standard static diffusion module coupled with a criticality search routine[2]. Such an approach involves two levels of iterations in one-dimensional problems and three in two- and three-dimensional problems - one level for the criticality search and the rest for the static calculation based on the power method[2]. As opposed to this conventional approach, we have applied a time dependent burnup (TDB) approach in which a kinetic module replaces the static one.

The TDB method is based on dividing the burnup range into burnup steps, where each one plays the role of a kinetic step change. The kinetic neutron balance equation, namely:

$$\frac{1}{v}\frac{\partial}{\partial t}\phi(\underline{r},E,t) = H\phi(\underline{r},E,t) \qquad (1)$$

is solved between burnup steps, coupled with a criticality search routine, where H is the appropriate neutron balance operator. The advantages of the proposed method are twofold. Firstly no delayed neutron equations are needed since we are interested in an asymptotic behavior of the critical flux. We also do not have to consider the sufficiently small time step being used for the solution of equation[1], as asymptotic behavior is not sensitive to the time step magnitude when using an implicit stable solution scheme. Secondly, with the TDB method we have an inhomogeneous equation to solve, as opposed to the static homogeneous eigenvalue equation which we have to solve with the conventional method, namely:

$$H\phi(\underline{r},E,t) = 0 \qquad (2)$$

Not having a homogeneous equation eliminates the outer iterations level usually needed[2], thus reducing, at least potentially, the computing time required.

The TDB method was applied successfully to both 1-D, 2-G (one-dimensional, two groups) and 2-D, 2-G problems. The problems solved are based on a TMI-1 PWR core, utilizing cross section data produced by the PSU-LEOPARD[3] cell code.

While not taking full advantage of accelerating techniques which exist for the solution method we used, we could show a reduction by a factor three to four in computing time with no loss in accuracy, comparing power fractions and soluble boron content with a standard calculation. Further reduction in required computing time is anticipated with application of well proven techniques, like systematic SOR (successive overrelaxation) or coarse mesh rebalancing methods.

REFERENCES:

1. Bartal, Y., and Yiftah, S., in Trans. Nucl. Soc. Israel, vol. 8, 1980, p. 25
2. Duderstadt, J. R. and Hamilton, L. J., Nuclear Reactor Analysis, Wiley, N.Y., 1976.
3. Cenko, M., The PSU PEMP User's Guide, PSBR-315-497483, Pennsylvania State University, 1974.

ON ITERATIVE METHODS IN DIFFUSION CALCULATIONS

Y. Bartal and S. Yiftah

Diffusion calculations in reactor problems are performed using iterative methods. Two of the most popular iterative methods are the EQUIPOISE[1] scheme, used for example in the MINI[2] code, and the inner-outer iterations scheme[3]. We have encountered the following problems in using the iterative process with our MINI code.

a) Initial guess. It is widely agreed that iterative solutions need less iterations when the initial guess is close to the fully converged solution. We have found for a PWR problem using MINI that 202 iterations were needed for a convergence of 10^{-5} when using already converged fluxes. These converged fluxes were obtained within 222 iterations for the same convergence criterion using a flat flux guess. This example shows that the reduction in CPU time for a close initial guess might be solution-method-dependent.

b) Reliability of solution. Most diffusion calculations have some sort of convergence criterion in the range 10^{-3}-10^{-5}. We found that there is a difference in power fractions of up to 7% between an accelerated and an unaccelerated iterative solution for a PWR core when a criterion of 10^{-3} is used. This was reduced to 0.3% when a criterion of 10^{-4} is used, which shows that 10^{-3} might be an unreliable criterion when using different iterative schemes.

c) Roundoff errors. We found in some problems that a convergence of less than $2x10^{-4}$ could never be reached with MINI due to roundoff errors. This was verified by running a double precision version of MINI. It has 16 significant digits on an IBM computer instead of about 7 significant digits in the single precision version.

These last two problems make the desired range for choosing convergence criteria quite narrow, around 10^{-4}.

REFERENCES:

1. Tobias, M. and Fowler, T. B., Nucl. Sci. Eng. 12, 513 (1962)
2. Bartal, Y., The Soreq Nuclear Research Centre, (SNRC) version of the Pennsylvania State University PWR Fuel Management Package (PSU-PFMP) User's Guide, in press.
3. Duderstadt, J. and Hamilton, L.J., Nuclear Reactor Analysis, Wiley, New York, 1976.

LEADPOT, A FORTRAN PROGRAM FOR THE EVALUATION OF THE SHIELDING-THICKNESS REQUIRED FOR RADIATION SOURCES

M. Pasi, Y. Even-Zohar and I. Caras

The LEADPOT program was developed to evaluate the shielding thickness needed for containers of any shielding material intended for the storage and transport of radiation sources.

The container is a block of shielding material, either spherical, cylindrical or octagonal, containing a radiation source in a small (1 cm diam and height) hole at its center. The program can be applied to various types of sources and shielding materials. The results were calculated for 4 radiation levels from 25 to 100 mr/h in contact with the wall.

The program allows for both absorption and build-up of radiation through the shielding layer, and is based on the equation

$$F = K \frac{A}{(x+0.5)^2} e^{-\mu x} \left(A_i e^{-\alpha_1 \mu x} + A_2 e^{-\alpha_2 \mu x}\right)$$

where the last factor in the parenthesis is the Taylor expression for the build-up phenomenon, with its specific coefficients A_1, A_2, α_1 and α_2. The above equation is transcendental relative to x, and can therefore be solved only by an iterative method. We chose the Newton-Raphson method, and arrived at an approximated value of x, with a deviation of less than 1 mm from the final value.

The program has been run for 1 mCi to 20 Ci Cs-137 and Co-60 sources, for the radiation levels mentioned above. A total of 5347 iteration-steps were needed. The program also gives the weights of the containers, for the 3 shapes used.

TECHNION - ISRAEL INSTITUTE OF TECHNOLOGY

OZMA—A Code to Calculate Resonance Reaction Rates in Reactor Lattices Using Resonance Profile Tabulations

NP-926
Research Project 709-1
Topical Report, February 1981

Principal Investigators
J. Barhen
W. Rothenstein

The OZMA code solves the neutron transport equation for a reactor lattice unit cell at energies which lie in the resolved resonance regions of the lattice nuclides. Spherical, slab, cylindrical, square and hexagonal geometries can be handled.

The code does not make direct use of resonance parameters, but is based on pre-processing these into Doppler broadened cross section tables of high accuracy and sufficient detail to follow the resonance shapes throughout the resolved resonance region. From these tables the cross sections of the nuclide mixtures contained in the different subregions of the lattice unit cell can be readily derived at all energies needed for the resonance calculations with the same accuracy as that attained in the library processing programs.

A new methodology was developed for solving the point-energy integral or discrete ordinates transport equations on a dense energy grid as required to handle resonance profiles. The resulting spatially dependent flux spectrum provides all resonance reaction rates needed for subsequent complete lattice analysis.

The OZMA code is most readily applied as a sophisticated resonance module for the HAMMER lattice code. It is more flexible and more accurate than the resonance treatments provided in HAMMER itself in the resolved resonance region. In particular mixtures of numerous resonance nuclides can be handled simultaneously rather than by individual resonance treatments. The results obtained by the OZMA code can also be used as reference values against which simpler resonance treatments can be checked.

The current report provides a complete description of the OZMA code itself, the input instructions, sample input and details of the output.

Temperature Dependence of the Multiplication Factor In LWR Lattices

NP-1694
Research Project 709-1

Final Report, February 1981

Principal Investigators
W. Rothenstein
E. Taviv

The temperature dependence of the neutron multiplication in typical BWR and PWR unit cells is determined as a function of fuel depletion when the fuel temperature is changed from 800°K to 1200°K. The cross section changes with temperature of the principal isotopes of Uranium and Plutonium, and of some fission products, are taken into account simultaneously in the lattice analysis by means of very detailed resonance profile tabulations in the resolved resonance region of each nuclide. In addition the small temperature dependence of non 1/v absorption cross sections is included in the thermal multigroup library, as well as the UO_2 group to group scattering kernel as a function of temperature in the thermal energy region.

The results show that even if all these various effects are included in the calculations and interferences between them are properly allowed for, the principal temperature changes are due to the Doppler broadening of the resonances of ^{238}U and in the later burnup stages to some extent of ^{240}Pu. Fissile isotopes contribute only slightly to the reactivity coefficient, the magnitude and sign of these contributions being strongly influenced by resonance overlap with ^{238}U. The same applies to individual fission products which have an almost negligible effect on the temperature change of the multiplication factor.

The report includes details relating to the temperature dependent cross section libraries, broad group cross sections and fluxes, together with the calculational methods which make use of discrete ordinate integral transport calculations at epithermal energies and multigroup methods in the other energy ranges.

RESONANCE ABSORPTION CALCULATIONS IN THERMAL REACTORS

W. ROTHENSTEIN
Technion- Israel Institute of Technology, Department of Nuclear Engineering, Haifa, Israel

1. INTRODUCTION

The calculation of resonance absorption rates in nuclear reactor cores has long been recognized as one of the most complicated parts of reactor analysis, on account of the large number of nuclides with pronounced resonances which are present in the fuel, and the drastic cross-section changes that occur in each resonance, sometimes over very narrow energy ranges. The difficulties arise both from the mathematical complexity involved in the accurate description of the cross-section shapes, and their changes with temperature, and from the flux changes produced by the resonance absorption. In thermal reactor cores which exhibit considerable heterogeneity to neutron transport, further problems are incurred owing to the spatial shielding effects which at certain energies, prevent the neutrons from penetrating deeply into the fuel rods. A complete physical description of the behaviour of a reactor must include detailed analysis of all the different regions into which it is subdivided, whether small or large. These include the fuel pins or rods, their cladding and surrounding moderator or coolant on the one hand, and different types of fuel assemblies, possibly containing burnable poison or control rods, as well as reflector regions and structural materials, on the other. In addition, the time dependence of the neutron flux is of great importance. The complexity of the final problem to be studied therefore precludes any possibility of treating the energy dependence of the neutron flux in sufficient detail for the effects of the different resonances to be noticed independently. In practice, the entire energy range from subthermal energies to about 20 MeV must be collapsed into very few groups, and resonance effects, as well as slow changes of cross-sections with energy in other energy regions, must be integrated into the few group parameters which are used for the final analysis of the entire reactor assembly.

In the preparation of few-group parameters, the magnitude of the resonance absorption problem immediately becomes apparent. The procedure for cross-sections which vary slowly with energy is straightforward, and proceeds in several separate stages, from the basic data as functions of energy, by group averaging. Flux weighting is used at every step so that the group average cross-sections preserve the reaction rates. The quality of the weighting function is successively improved. Initially, the basic data are group-averaged over a fairly large number of groups (typically a hundred or more) spanning the entire energy range, with extremely simple flux weighting functions within each group, since in such fine groups, in which the cross-sections vary only slightly, inaccuracies in the energy dependence of the weighting function affect the group averages only to a negligible extent. At the next step of group collapse the weighting function must be much more representative of the flux spectrum in the part of the reactor where the average few-group parameters will be utilized. A customary weighting scheme is obtained (from simple slowing-down treatments at epithermal energies, and spectrum calculations in the thermal energy region) for a geometrical model and material composition representing the reactor region under consideration as closely as possible within the limitations of the calculational model; the neutron streaming from, or into, the region is again treated in a straightforward manner, for example in a treatment in which the leakage is represented by a buckling parameter. The collapsed few-group parameters which preserve the reaction rates can then be utilized with confidence for the analysis of the entire reactor assembly. Alternatively, an additional step based on a refined flux-weighting function can be introduced into the cross-section averaging procedure used to obtain the group parameters in sufficiently few groups. On the other hand, resonance reaction rates do not fit into this overall scheme.

even when several hundred fine groups are used for the initial transition from the basic data to the fine group cross-sections. Each individual fine group may still contain several resonances, or even if in some groups there is only one resonance, the cross-sections still vary drastically within the group. Consequently one has to resort to other methods to treat the resonance problem.

The resonance absorption depends on the fine structure of the flux, which has pronounced dips near the energies of the cross-section peaks. An accurate calculation would aim at evaluating the resonance reaction rates directly, after the energy dependence of the flux has been determined in sufficient detail, particularly at energies in the vicinity of the resonance peaks. Such calculations are in fact quite feasible at present on large computers, for cases in which the material composition and geometrical description of the problem under investigation are not too complicated. They have been applied in recent years to benchmark problems, where computer time is not a great obstacle. However, in many practical cases simpler methods must be used, even if they involve some approximations. The effect of the approximations should of course be tested by suitable comparisons with the more sophisticated procedures. The simpler methods are frequently based on the use of effective resonance integrals or group average resonance cross-sections for the fine energy groups previously referred to. Both these types of quantities require a certain amount of care in their definition and their subsequent use. The fluxes used to evaluate them are usually merely approximations to the true fluxes, so that there may be errors in the details of the weighting function, especially near its minima. Average resonance cross-sections are defined so that, when multiplied by the flux integrated over energy, they lead to the correct reaction rates. It must be borne in mind, however, that the subsequent use of the group average resonance cross-sections, in combination with appropriate slowing down theories from group to group, may yield group fluxes which do not agree precisely with the group integral of the weighting flux in the averaging procedure. This may lead to some inaccuracies. When effective resonance integrals are used, on the other hand, an attempt is made to separate the phenomena due to the flux depression near the resonance peaks from the overall flux changes due to absorption. Although this can be done with good accuracy, small inaccuracies may ultimately remain which are inherent in the approach used.

The present paper is devoted to a number of different practical methods in which the resonance absorption problem has been handled in the case of thermal reactor lattices. Some basic source papers dealing with these methods are included in the Appendices. At the outset, the fundamental aspects of the principal methods of calculation will be presented, and finally attention is given to some very detailed numerical procedures which have been used of late to treat benchmark problems with considerable sophistication.

With the current tendency to rely ultimately on advanced computer techniques, emphasis is given to the precise definition of the quantities which are calculated and the approximations which are still unavoidable in the computer codes, rather than to the analytical methods which have been used in the past to obtain higher order solutions to simplified problems, such as those which utilize unbroadened Breit-Wigner resonance shapes.

THE WEIZMANN INSTITUTE OF SCIENCE*

NUCLEAR PHYSICS

Experimental Physics

Heavy Ion Reactions

The measurement of neutron emission in the deep-inelastic reaction (DIR) of ^{86}Kr projectiles on ^{166}Er targets has been extended to 12.1 MeV/nucleon, the highest energy presently available at the UNILAC accelerator of the GSI laboratory in Darmstadt. The work was done in collaboration with groups from GSI and Frankfurt. By using four position-sensitive parallel-plate counters we determined that also at 12 MeV/nucleon the deep-inelastic reaction results almost exclusively in the breakup into two heavy fragments and that breakup into three and more fragments is rare. The detailed analysis of the results is in progress.

The investigation of light-particle emission in the deep-inelastic reaction of an ^{16}O projectile on various Ca isotopes was continued. The angular and energy distributions of alpha particles and protons emitted in the DIR of 100 MeV ^{16}O on ^{40}Ca was measured with the Weizmann Institute Pelletron. The emission of neutrons, protons and alpha particles for 100 MeV ^{16}O on ^{44}Ca and 140 MeV ^{16}O on ^{44}Ca and ^{48}Ca was measured at the MP tandem laboratory of the MPI, Heidelberg, in collaboration with a local group. The angular and energy distribution of the charged particles for the three Ca isotopes at the two bombarding energies indicates that these particles are almost exclusively emitted in a pre-equilibrium process. The analysis of the neutron spectra is in progress. An investigation of the DIR of ^{16}O on ^{16}O at 100 MeV bombarding energy has been started at the Pelletron in order to study DIR in light symmetric systems. The charge of one fragment and the mass of both fragments are determined in this experiment. (A. Breskin, E. Duering, Z. Fraenkel, I. Tserruya, S. Wald)

Atomic Polarization and Nuclear Magnetic Moments

The objective of this research is two-fold: (a) broadening our understanding of the solid state and atomic physics phenomena that produce atomic polarization of deeply bound electronic levels, which in turn give rise to megagauss magnetic fields on the nucleus, and (b) utilizing this knowledge to further the experimental ability to measure the sign and magnitude of ps nuclear levels. The dynamic (transient) field which acts on fast ions traversing a ferromagnetic foil and the surface interaction which acts on ions recoiling at an angle to the target surface have been studied.

The thin foil, dynamic field technique has been applied to measure the magnetic moments of the 2_1^+ levels in even Sn isotopes (with a closed Z=50 proton shell) and in ^{92,94}Zr (with 2 and 4 neutrons outside the closed ^{90}Zr core). For both series of isotopes, the magnetic moments exhibit trends which indicate the sensitivity of such measurements to the shell-model structure in these mass regions. Using the same technique, we participate in an experiment at GSI, Germany, to measure magnetic moments of levels in the ground state rotational band in Dy isotopes.

After the first two experiments with the tilted-foil method in ^{16}O and ^{18}O, the measurements have been extended to Ca isotopes and to the Sm-Nd region. A sizable atomic polarization ($p \approx 0.1 - 0.15$) has been observed. Models have been developed to treat the influence of atomic polarization in a complex electronic ensemble on the nucleus. These models were used to measure the magnetic moment of the 2_1^+ level of ^{44}Ca. The result demonstrates the rather pure $(f_{7/2})^4$ nature of this level. (C. Broude, G. Goldring, M. Hass, Y. Niv, A. Zemel)

g-Factor Measurements

Gamma-ray precession measurements have been made for ^{134}Ce and neighboring nuclei excited in the ^{122}Sn (^{16}O,xn) reaction, recoiling into magnetized iron, gadolinium and in external fields to clarify the structure of this nucleus which has both a pronounced backbend and an associated strong inhibition of the ground

---

* Reprinted from "Scientific Activities 1979"

state band B(E2)'s. For the analysis of such data, a detailed knowledge is needed of all the spectroscopic parameters of the ground state band and side feeding levels. Consequently, we have made γ-γ coincidence measurements to identify side feeding transitions and precision angular distribution measurements and intend to make lifetime measurements on several nanosecond isomeric states.
The sequence of the hyperfine precessions from all levels in the complex decay scheme must be completely and consistently analyzed before possible deviations from collective g-factors might be observed. Conclusions which can be drawn are: the isomeric 3209 keV level, which feeds the 8^+ of ^{134}Ce and is believed to be 10^+, is observed to have a negative g-factor, and a band based on a possible 5 level feeding into the ground state band 4^+ state has been identified.
This work is being carried out in association with laboratories in Strasbourg and Bonn. (C. Broude, M. Goldberg, A. Zemel).

Gamma-rays from Fission

Studies of even-even products of spontaneous fission of ^{254}Cf have been carried out by measurement of the prompt γ-ray de-excitation in coincidence with fission fragment kinetic energies. Half life values in the range 0.1–5 ns were obtained by measuring the non-doppler shifted intensity of transitions emitted from fragments stopped in a detector after travelling a variety of distances from the emitting source. New lowest 2^+ transitions and half lives were obtained in ^{98}Sr, 144.4 keV, $4^{+3}_{-1.5}$ ns; ^{104}Zr 140.1 keV, 2.5 ns; ^{108}Mo, 172.1 keV, $1.2^{+.35}_{-.2}$ ns; and ^{142}Xe, 205 keV, 0.25 ± 0.15 ns. Half life values of transitions in known neutron-rich isotopes were confirmed and their intensities measured enabling the determination of the independent yield of even-even fission products of ^{254}Cf. It was found that on the whole the average product yield in ^{254}Cf is 0.59 neutron richer for light products and 1.10 richer in heavy products compared with ^{252}Cf.
This work is being carried out in collaboration with the Los Alamos Scientific Laboratory. (H.A. Selic, E. Cheifetz and J.B. Wilhelmy[1])

Investigations with Accelerated Molecular Ions

Combined energy and angular distributions of protons resulting from Coulomb explosion of 11.2 MeV OH^+ molecules in carbon foils have been measured in simultaneous coincidence with different emerging oxygen charge states. The data provided us with novel concepts on the potential and the forces around moving ions in matter. The interpretation of molecular ion interaction with solids through conventional stopping power theories was examined.
We have initiated a new method of studying the structure of accelerated molecular ions. Structure determination by observation of the ion fragments from dissociation of the fast molecules in a thin foil turned out to be a fruitful and unique method. An extension of this technique to ions other than protons and to molecules containing more than three atoms has been made possible by our development of a new type of silicon detector which is currently used to measure a variety of molecular ions. (M. Algranati, A. Breskin, A. Faibis, G. Goldring, M. Hass, R. Kaim, Z. Vager, N. Zwang)

Nuclear Instrumentation

Multiwire proportional chambers (MWPC) operating at very low gas pressure (below 2 torr) offer some outstanding properties concerning the gain ($>10^6$), time resolution (100 psec FWHM), rate capability ($>10^5$ c/sec.mm^2) and double-track resolution. The above-mentioned properties of MWPC's combined with good position resolution and with the possibility of using very thin windows (of few μg/cm^2), may lead to a large scope of possible applications in the domain of heavily ionizing as well as light particles. (A. Breskin, R. Chechik, N. Zwang[2])
A set of position-sensitive parallel-plate avalanche counters (PPAC) have been designed, built and used in a neutron-correlation-deep-inelastic experiment of Er on Kr, at the GSI-Darmstadt. (A. Breskin, R. Chechik, Z. Fraenkel, I. Tserruya, S. Wald, N. Zwang)
A multiparticle position-sensitive and timing camera, for the study of the Coulomb explosion of molecular ions, has been designed and built using the PPAC technique. The camera is presently being tested with a H_3^+ beam. (A. Breskin, A. Faibis, N. Zwang)

[1] Los Alamos Scientific Laboratory, NM

Preliminary beam tests of the chopper-buncher system for heavy ion beams of the Pelletron accelerator have been carried out. A bunch width of 500 picoseconds was obtained with a proton beam using the chopper and low energy buncher. This result agrees with the computed performance of the system. A beam phase monitor employing a channel-plate electron detector was developed. We expect the complete system to be available to nuclear physics experiments in 1980, with bunches of the order of 100 picoseconds width, 3.36 MHz repetition rate and 15% duty cycle. (I. Ben-Zvi, M. Birk, J.S. Sokolowski)

Summaries

Dynamic excitation in the fission of ^{240}Pu

Z. Paltiel and Z. Fraenkel

The excitation mechanism of the fission process is studied in terms of a model of particles moving in a deformed time-dependent potential. A residual interaction of the pairing type is incorporated by means of the BCS approximation. No limitations are imposed on the number of quasiparticles. The calculations of the dynamical variables are done by solving numerically the equation of motion of the quasiparticle density and pairing matrices. The set of quasiparticle states is truncated by an energy cutoff. The effects of this cutoff on the results are negligible. Comparison with calculations for ^{240}Pu which were restricted to two-quasiparticle excitations only shows that this restriction results in an appreciable underestimate of the total excitation energy. The estimated collective energy is found to be at least one order of magnitude smaller than the dissipated energy for an oscillatory motion of the collective coordinates.

Neutron emission in deep inelastic collisions induced by ^{86}Kr on ^{166}Er at 5.7, 7.0, and 7.9 MeV/nucleon

Institut für Kernphysik, Frankfurt–GSI, Darmstadt–Weizmann Institute Collaboration, including Y. Eyal, A. Gavron, I. Tserruya, Z. Fraenkel, Y. Eisen and S. Wald

Neutron emission associated with deep inelastic collisions of 496-, 602-, and 675-MeV ^{86}Kr with ^{166}Er has been studied as a function of kinetic energy loss, fragment mass and neutron scattering angles. The major de-excitation process is neutron evaporation from fully accelerated fragments. The excitation energy is shared between the fragments in proportion to their mass, indicating energy equilibration in the intermediate dinuclear composite system for the completely damped as for the quasielastic components. Within limits imposed by the systematic uncertainties, the angular and velocity distributions of the neutrons in the laboratory frame are consistent with isotropic emission of neutrons in the c.m. frame of the fragments. We find no evidence for pre-equilibrium effects. The observed multiplicities and energy spectra of the neutrons are consistent with predictions of statistical-model calculations.

Evidence for statistical equilibrium of the fragment isobaric distributions in strongly damped collisions of ^{86}Kr with ^{166}Er

Y. Eyal, G. Rudolf[1], I. Rode[2] and H. Stelzer[2]

Primary (pre-evaporation) fragment mass distributions and fragment charge distributions have been measured for deep inelastic collisions of ^{86}Kr with ^{166}Er at $E_{c.m.} \sim 400$ MeV. It is shown that the relations between the lower moments of the above fragment distributions are consistent with the formation of a statistically equilibrated intermediate dinuclear complex over a wide range of kinetic-energy damping.

[1] Centre de Recherches Nucléaires, Strasbourg
[2] Gesellschaft für Schwerionenforschung, Darmstadt

Magnetic moments in calcium isotopes via a surface-interaction experiment

Y. Niv, M. Hass, A. Zemel, and G. Goldring

A rotation of the angular correlation of deexcitation γ rays from ^{40}Ca and ^{44}Ca was observed in a tilted foil geometry. The signs and magnitudes of the magnetic moments of the 2_1^+ level of ^{44}Ca and of the 3_1^- level of ^{40}Ca were determined to be $g = -0.28 \pm 0.11$ and $g = +0.52 \pm 0.18$, respectively. The experiment demonstrates that polarization of deeply bound electronic configurations can be appreciable and that this technique can be used as a quantitative measure of magnetic moments of picosecond nuclear levels.

Hyperfine interaction and g-factor measurements in Er isotopes

K-H. Speidel[1], G.J. Kumbartzki[1], W. Knauer[1], R. Kuhnen[1], G. Kraft[2], J. Gerber[3], M. B. Goldberg, G. Goldring and A. Zemel

Energy levels in ^{160}Er and ^{159}Er were excited in the reactions:

$^{28}Si(^{136}Xe, {}^{4n}_{5n})\, {}^{160}_{159}Er$ and the product nuclei, recoiling with a velocity v=0.07c, were stopped in a plunger instrument after traversing a volume of hydrogen gas. The angular distribution of de-excitation gamma rays was studied as a function of flight time and gas pressure. Appreciable perturbations were detected in ^{160}Er at times as short as 2 ps and in an angular momentum region as high as 12ħ. No perturbation could be detected in the $21/2^+$ level of ^{159}Er even after 12 ps, signifying a low value for the g-factor of this level.

[1] Institut für Strahlen- und Kernphysik, Universität Bonn
[2] Gesellschaft für Schwere Ionen, Darmstadt
[3] Centre de Recherches Nucléaires, Strasbourg

Even-even neutron rich isotopes

E. Cheifetz, H.A. Selic, A. Wolf[1], R. Chechik and J.B. Wilhelmy[2]

Nuclear spectroscopy of even-even fission products is discussed in view of available data and techniques with emphasis on the capabilities of studying the prompt de-excitation spectra. Sources of fission products and their expected yields are evaluated with respect to neutron richness. Experimental methods and specific experiments of detecting radiations from unseparated fission products for assignments of levels, lifetime measurements, and measurements based on the initial alignment of the fragments are described. Some preliminary results from an experiment with a source of ^{254}Cf are given. The above results are incorporated with results from detailed studies following beta decays to give a general picture of the region of transition nuclei leading to deformations in the rare earth and the onset of deformation in the Zr-Mo-Ru fission products.

[1] Negev Nuclear Research Center, Beersheva
[2] Los Alamos Scientific Laboratory, NM

Neutron rich fragments from spontaneous fission of ^{254}Cf

H.A. Selic, E. Cheifetz, A. Wolf[1] and J.B. Wilhelmy[2]

Studies of even-even products of ^{254}Cf have been carried out by measurement of the γ-ray deexcitation of lowest $2^+ \rightarrow 0^+$ transitions in coincidence with fission fragments kinetic energies to obtain independent fission yields as a function of fragment masses.

Results of independent fission yields of already known $2^+ \rightarrow 0^+$ transitions from ^{252}Cf are compared with results obtained by spontaneous fission of ^{254}Cf and a detailed description of the product distribution in ^{254}Cf are given.

[1] Negev Nuclear Research Center, Beersheva
[2] Los Alamos Scientific Laboratory, NM

Use of charge transfer device for particle detection

M. Algranati A. Faibis, R. Kaim and Z. Vager

We have shown that a solid state image sensor array is suitable for use as a high-resolution two-dimensional detector of fast charged particles.

Coulomb explosion of 11.2 MeV OH^+ in carbon foils

A. Breskin, A. Faibis, G. Goldring, M. Hass, R. Kaim, Z. Vager and N. Zwang

Combined energy and angle distributions of protons resulting from Coulomb explosion of 11.2 MeV OH^+ in carbon foils have been measured in simultaneous coincidence with different emerging oxygen charge-states. The measurements were made with targets of thickness ranging from 80 Å to 740 Å. The proton distributions show strong asymmetry effects due to the electronic wake produced by oxygen atoms in the solid, and there is also a marked dependence of the shape of the distributions on both the target thickness and the oxygen charge-state downstream from the target.

Subnanosecond chopper-buncher system for heavy ions

I. Ben-Zvi, D. Bernstein, M. Birk, H. Feldman , Y. Gal and J.S. Sokolowski

A chopper-buncher for a 14UD Pelletron is being assembled and tested. The system was designed to produce heavy ion bursts of approximately 100 ps at 15% transmission. This system will be used for nuclear physics fast timing experiments and can also serve as an injector to a linac. The ion source beam is sliced by a deflector-redeflector chopper operating at 1.68 MHz. The chopper is followed by a 3rd harmonic corrected buncher, which produces bunches of less than 1 ns duration at the target area, for ions up to mass 60. Further bunching, down to 100 ps, is accomplished by a superconducting cavity operating at 430 MHz.

Heavy ion timing with very low pressure MWPCs

A. Breskin, R. Chechik and N. Zwang

A multiwire proportional chamber (MWPC) has been operated at gas pressures below 1 torr. A time resolution of about 100 ps (fwhm) has been reached with 27 MeV ^{16}O ions. The mechanism of operation, some of the properties and possible applications are discussed.

Dead time correction of measurements using scaledown units

A. Gavron, S. Wald and U. Lynen[1]

We have determined that experiments using scaledown units require dead time corrections which may be very different from those normally applied.

[1] Max Planck Institut für Kernphysik, Heidelberg

Simple partial pressure measurement of SF_6 in mixtures with nitrogen

J.M. Marks[1]

A simple but accurate method for the measurement of the partial pressure of SF_6 gas in mixtures with nitrogen is described. It is based on the ease with which the gases can be separated by freezing the SF_6.

[1] Former staff member