International Atomic Energy Agency

INDC(ROM)-15/GI
INT(83)-2

INDC INTERNATIONAL NUCLEAR DATA COMMITTEE

Measurements of Integral Cross Sections at 14 MeV for the following reactions:

$^{115}In(n,n')$, $^{197}Au(n,2n)$, $^{93}Nb(n,2n)$, $^{27}Al(n,\alpha)$, $^{56}Fe(n,p)$, $^{235}U(n,f)$, $^{239}Pu(n,f)$, $^{237}Np(n,f)$, $^{238}(n,f)$ and $^{232}Th(n,f)$

Dr. I. Gârlea, Cr. Miron, D. Dobrea, C. Roth, T. Mușat
Institute of Nuclear Power Reactors - Pitesti

H.N. Roșu
Institute of Nuclear Physics and Engineering - Bucharest

Work performed under IAEA Technical Co-operation Interregional Project INT/1/018 on Nuclear Data Techniques and Instrumentation

January 1983

IAEA NUCLEAR DATA SECTION, WAGRAMERSTRASSE 5, A-1400 VIENNA

Reproduced by the IAEA in Austria
April 1983

83-2124

INDC(ROM)-15/GI
INT(83)-2

Measurements of Integral Cross Sections at 14 MeV for the following reactions:

$^{115}In(n,n')$, $^{197}Au(n,2n)$, $^{93}Nb(n,2n)$, $^{27}Al(n,\alpha)$, $^{56}Fe(n,p)$, $^{235}U(n,f)$, $^{239}Pu(n,f)$, $^{237}Np(n,f)$, $^{238}(n,f)$ and $^{232}Th(n,f)$

Dr. I. Garlea, Cr. Miron, D. Dobrea, C. Roth, T. Musat
Institute of Nuclear Power Reactors - Pitesti

H.N. Rosu
Institute of Nuclear Physics and Engineering - Bucharest

Work performed under IAEA Technical Co-operation Interregional Project INT/1/018 on Nuclear Data Techniques and Instrumentation

January 1983

ABSTRACT

Neutron cross section measurements have been performed by using the neutron generator TEXAS, model 9900, of the Institute for Nuclear Physics and Engineering (INPE), Bucharest, ROMANIA.

The fission rates have been determined by means of the absolutely calibrated fission chambers. The fission cross sections of the reactions $^{235}U(n,f)$, $^{239}Pu(n,f)$, $^{238}U(n,f)$, $^{232}Th(n,f)$, $^{237}Np(n,f)$, related to the reference cross section of $^{235}U(n,f)$ have been measured for a neutron energy of 14.75 MeV.

The Ge-Li high-resolution gamma spectrometry has been used to get the activation rates, used subsequently to obtain the neutron activation cross sections for $^{197}Au(n,2n)$, $^{93}Nb(n,2n)$, $^{115}In(n,n')$, $^{27}Al(n,\alpha)$, $^{56}Fe(n,p)$. reactions, by using the same reference cross section.

The exposure device and flux monitoring system are describe in the report. The corrections applied to the measured reaction rates and the errors associated to the integral cross sections are also given.

Introduction

The measurements reported here have been performed under the IAEA Technical Co-operation Interregional Project INT/1/018, regarding nuclear data measurements with 14 MeV neutrons. They have been started in 1982, after the receiving of the tritium targets supplied by the Agency.

A procedure to measure fission and activation integral cross sections has been established. The cross sections primarily determined were those recommended by the Nuclear Data Section to check the measuring capabilities of the participants in the Interregional Project.

The neutron intensity of TEXAS source, model 9900, has been high enough to satisfy the statistics limits suggested by the project /1/.

Chapter 1 THE INTEGRAL FISSION CROSS SECTIONS

The experimental arrangement used to perform the exposures of fission chambers and activation foils to determine the 14.75 MeV neutron cross sections is given in fig.1. The main operation parameters of TEXAS-INPE generator have been as follows:

- high voltage 9o kV
- current 1oo μA
- intensity 5 x $1o^9$ neutron/s.

The Tritium targets are of 45 mm diameter and o.4 mm thicknesses, with Tritium absorbed in Titanium and their activity is about 1o Ci. The target is water cooled. The target-sample distance is equal to 13.4 mm , the samples being exposed on the generator window sreen.

The flux is monitored by means of three parallel-plate, sealed fission chambers, Saclay-made[2], 12 mm diameter, containing:

FC 6	1st monitor (MON1)	^{238}U + 1% ^{233}U
FC 7	2nd monitor (MON2)	^{238}U + 1% ^{239}Pu
FC 18	3rd monitor (MON3)	^{238}U + 200 ppm ^{235}U

and set at 120° radially, around the generator tube, perpendicular to the beam direction. The system allowed to control the positioning of the deuteron beam on the Tritium target. The run to run monitor levels have been correlated by means of the indications of the fission chamber-monitors.

The Saclay fission chambers containing ^{235}U, ^{239}Pu, ^{238}U, ^{237}Np, ^{232}Th have been exposed on the generator window screen to obtain the fission rates. They are plates, sealed, with outer diameters of 20 mm and 12 mm . Their characteristics are given

in Table 1. These chambers have been absolutely calibrated in the frame of the international programs[4,5]. The accuracy of fissionable deposit mass calibration is affected by an error between 1.6% and 3.5 %.

The fission rates have been measured by Grundl method[3], the following corrections being applied:

- extrapolation to zero (ETZ)
- fissionable impurities in deposit
- fission fragment absorbtion in deposit.

The fission rates related to permanent fission chamber-monitors indications are given in TABLE 2. As the generator beam shifts during the operation the detectors are seen under variable solid angle. To reduce the spot positioning uncertainties there are considered the ratios between the indications of the monitors 1 and 3, and respectively 2 and 3 , given in the same table. The ratio of reaction rates given by the monitor 1/monitor 3 , calculated by taking into account the deposit masses, is 1.525. The same ratio for monitor 2/monitor 3 is 1.346. The deviation from these values indicates quantitatively the spot shift by examining the corresponding experimental ratios for each measurement ; one can see that the maximum deviation for the ratio monitor 1/monitor 3 is 2.5% (2σ), while that for ratio monitor 2/monitor 3 is 3.7% (2σ). That corresponds to a maximum shift of about 1 mm.

The indications of the main fission chamber as given in column 3, have been related to the sum of the 3 monitors. The statistical errors assigned to the fission rates are between 0.56% and 1.81%; for monitor indications, the errors are in the range 0.97%-1.13%. The ETZ correction [6] is given in the last column of the Table 2 for each deposit used.

The procedure given in the reference [7] has been used to

calculate the energy and the energetical dispersion of the neutrons emitted by generator, by considering the inelastic scattering of a 90 keV deuteron incident on the target. The energetical dispersion corresponds to the angle under which the emission point source sees the detector. The values of calculation , for an accelerating voltage of 90 kV and a 0^0 emission angle, are given in Table 3; the energy of emitted neutrons being 14.75835 MeV. The dispersion is calculated for 2 exposure positions and for detector diameters between 6 mm and 20 mm.

The fission cross sections calculated from the measured fission rates are given in Table 4. The values of the applied corrections and the uncertainties in cross sections are given in Table 5. The total error in determining fission rates lays in the range 2.13% - 4.13%.

The absolute cross sections have been obtained for a $^{235}U(n,f)$ reference cross sections of 2.21 barns. The fission cross sections sp determined are given in Table 4 together with their associated errors (between 3.01%-abd 4.65%). The ratio σ measured/ σ calculated indicates a maximum deviation of 4.65%.

Chapter 2 THE ACTIVATION CROSS SECTIONS

The activation foils have been directly exposed on the generator window screen together with the fission chamber No.23, containing ^{235}U . The physical characteristics of the pure metal activation foils are given in Table 6. The detector diameters are in the range 12.7-20 mm and their thicknesses in the range 0.127 - 1 mm. The impurity contents (cf. supplier's material data sheets) are given in the same table.

The gamma activities have been measured by means of 100 cm^3 Ge-Li crystal, calibrated in abolute efficiency/8.9/. The measurements have been performed by NUCLEAR DATA 4420 analyzer (4096 channels) equipped with 100 MHz ADC, the distance source-crystal being 5 cm. The crystal resolution is 2.89 keV for 1332.5 keV ^{60}Co radiation and calibration factor being of 0.356 keV/channel. The gamma spectra have been processed by means of the SAMPO code/10/, on a PDP 15 computer, to get the absolute emission intensities. The reaction rates as given in Table 7 have been calculated by using the nuclear constants from reference/11/.

For calculating the activation rates we determined the average flux for each irradiation by using the indications of ^{235}U fission chamber No23, exposed both with the foil and without. The values of the neutron flux given in Table 8 are obtained by averaging the two indications related to the levels supplied by the permanent monitors. In the first column of the Table 8 there are given the pertinent reactions and in the second column the measured noncorrected activation cross sections. The integral activation cross sections are found by appliying the corrections for gamma selfabsorption and impurities, given in the same table. As a reference

cross section is also taken that of $^{235}U(n,f)$ reaction. The integral cross sections are compared to the ENDL calculated ones. The largest discrepancies correspond to the reactions:

$^{93}Nb(n,2n)$	+23%
$^{115}In(n,n')$	-21.6%

The errors associated to the absolute activation cross sections arise from:

- statistics	0.63% - 1.6%
- calibration in absolute efficiency	1.55% - 2.17%
- background subtraction	o.50% - 1.2%
- absolute flux determination	2.13% - 2.50%.

R E F E R E N C E

/1 /. N.Kocherov,J.J.Schmidt, edt - Proposal for an Interregional Project for Training in Basic Techniques for the Generation of Nuclear Data Required for the Development and Applications of Nuclear Science and Technology, Vienna, IAEA (1980), INDC(NDS)-122/L

/2 /. M.Guery,A.Jarrage - Rev.Phys.Appl.,Tome 6, 121, (1971)

/3 /. J.Grundl, et al- Nucl.Technol., vol. 25, (1975)

/4 /. A.Fabry,I.Gârlea - Techn. rep. IAEA - 208, vol.II, (1978)

/5/. I.Gârlea et al - Rev.Roum.Physique, No.4, p.409, (1978)

/6 /. J.Grundl - Private comunication

/7 /. K.Beckurts,K.Wirtz - Neutron Physics, Springer Verlag, Berlin, (1964)

/8 /. I.Gârlea et al - St.Cerc.Fizică, No.10, (1981)

/9 /. I-Gârlea - Doctor thesis, Bucharest, (1979)

/10/. J.T.Routti - Rap. UCRL 19452 (1967)

/11/. xxx - Die γ - Linien der Radionuclide, (1970)

TABLE 1: The fission chamber characteristics

Main isotope	Chamber identification	Total mass of deposit	Ø deposit	Main isotope mass (nuclei x10^{17})	The isotopic composition (atom %)
^{235}U	23	96,60±1.7%	15	2,281±1,6%	99.89% ^{235}U, 0.02% ^{234}U, 0.04% ^{236}U, 0.07% ^{238}U
^{239}Pu	24	95.24±0.15%	15	2,367±1.8%	99.88% ^{239}Pu, 0.12% ^{240}Pu
^{238}U	27	84.0±0.9%	15	2,178±3,0%	~100% ^{238}U, 400 ppm ^{235}U
^{237}Np	25	83,50±0,3%	15	2.123±2,4%	~100% ^{237}Np, 0.4 ppm ^{239}Pu
^{232}Th	17	65,49±3,5%	9	1,700±3,5%	~100% ^{232}Th, 0.16% U_{nat}

TABLE 2: Fission chamber measurement data

Main isotope	Fission chamber identification	S_{UCF} (cps)	$S_{UMON(1+2+3)}$ (cps)	$\frac{S_{UCF}}{S_{UMON(1+2+3)}}$	$\frac{S_{UMON1}}{S_{UMON3}}$	$\frac{S_{UMON2}}{S_{UMON3}}$	ETZ correction
^{235}U	23	13.55±0.60%	5,10±0,97%	2.656±1.30%	1.552	1.291	1,014
^{239}Pu	24	17,34±0,56%	5,20±1,03%	3,335±1,17%	1.548	1.316	1,014
^{237}Np	25	11,84±0,68%	4,33±1,13%	2,734±1,32%	1,514	1,340	1.014
^{238}U	27	4,81±1,00%	4,21±1,06%	1,143±1,46%	1,581	1,306	1,041
^{232}Th	17	1,27±1,81%	3,54±1,09%	0,359±2,11%	1,520	1,330	1,052

MON1 - CF 6 ^{238}U + 1% ^{233}U

MON2 - CF 7 ^{238}U + 1% ^{239}Pu

MON3 - CF18 ^{238}U + 200 ppm ^{235}U

TABLE 3: The energetical dispersion at the TEXAS neutron source

Detector diameter	Energetical dispersion (KeV)	
	1st position	2nd position
6	16.1	5.41
8	27.83	9.35
12	58.1	20.88
15	84.69	31.78
20	131.79	53.54

1st position - source-detector distance is 13.4cm

2nd position - source-detector distance is 23.4cm

High voltage = 90 KV

$E_{neutron\ 0^o}$ = 14.75835 MeV

TABLE 4: The integral fission cross sections at 14,75 MeV

Reaction	Fission rate	$\frac{\sigma_i}{\sigma_5}$	$\sigma_{calculated}$	$\sigma_{measured}$	σ_m / σ_c
$^{235}U(n,f)$	2,691±2,13%	-	2,21	-	-
$^{239}Pu(n,f)$	3,379±2,22%	1,210	2,56	2,67±3,01%	1,04
$^{237}Np(n,f)$	2,773±2,80%	1,107	2,45	2,45±3,52%	1,00
$^{238}U(n,f)$	1,190±2,87%	0,571	1,23	1,26±3,74%	1,02
$^{232}Th(n,f)$	0,378±4,13%	0,188	0,407	0,415±4,65%	1,02

TABLE 5: Corrections and incertitudes in fission cross sections

Source of correction and/or uncertainty	Correction	Uncertainty
- Counting statistics	-	±0.56 - 1.81%
- Dead-time losses	no	-
- Undetected fission fragments		
• extrapolation to zero ETZ	1.014 - 1.052	±0.4%
• absortion in deposit	0.66 - 0.69 (for 100 $\mu g/cm^2$)	±0.35%
- Fission of impurity isotope	1.000 - 0.998	±0.2%
- Flux level (run-to-run monitoring)	-	±0.97 - 1.13%
- Deposit mass calibration	-	±1.6 - 3.5%

TABLE 6: The activation foil characteristics

Foil	Weight (g)	Diameter (mm)	Thickness (mm)	Purity (%)	Impurities (%)
Au-2	0,722206	20	0,127	99,998	-
Al-2	0,580541	19,05	0,762	99,994	Mg < 0.001, Fe < 0.002, Cu < 0.001, Ca-0.002
Nb-2	1,574339	15	1	99.837	Mo, Hf-0.01, Pb, Co, V, Cu, Sn, Cr, Al, Ca, Mn, Ni-0.002, H, Cd-0.005, Ta-0,075, Fe, Zr-0.005 W-0.013, C-o,0024, O-0.0074, N-0.0049 B-0.0002
Fe-2	0,136748	12,7	0,127	99,823	Cr-0.02, Mn-0.025, Co-0.07, Ni-0.06, Cu-0.05, Mo-0.007, Sn0.008
In-2	0,259473	20	0,127	99,9959	Cu-o.0002, Pb-0.0018, Sn-0.0014, Cd-0.0007

TABLE 7: The activation reaction rates

**** FOIL CODE AUR AU2 ****

**** FOIL WEIGHT(GRAMS)= 7.222060E-01 SCALE FACTOR= 1.333000E-08 ****

**** REACTION 197AU(N,2N)196AU ENERGY= 356.00 SATURATION FACTOR= 9.298610E-03 ****

**** EXPOSURE DATE27-12-82- 5H 48M ****

MEAS NO	MEASUREMENT DATE					COOLING TIME	COUNTING TIME	INTENSITY PER SEC	INTENSITY(TO)	REACTION RATE
1 *	82	12	27	8	35 *	167.0	66.67	2.84272E+03	2.8800491E+03	2.0081656E-24
2 *	82	12	27	11	18 *	330.0	30.00	2.86750E+03	2.9421856E+03	2.0514914E-24
3 *	82	12	27	12	56 *	428.0	30.00	2.86494E+03	2.9620763E+03	2.0653605E-24
4 *	82	12	27	14	34 *	526.0	30.00	2.88244E+03	3.0029935E+03	2.0938907E-24
5 *	82	12	27	16	12 *	624.0	30.00	2.84200E+03	2.9835335E+03	2.0803220E-24

**** A V E R A G E V A L U E ****

REACTION RATE	STANDARD DEVIATION	ERROR(%)
205.9846133E-26	3.2974922E-26	1.6008

**** FOIL CODE ALUMI AL2 ****

**** FOIL WEIGHT(GRAMS)= 5.805410E-01 SCALE FACTOR= 1.690000E-08 ****

**** REACTION 27AL(N,ALPHA)24NA ENERGY=1368.54 SATURATION FACTOR= 4.514369E-02 ****

**** EXPOSURE DATE27-12-82- 6H 55M ****

MEAS NO	MEASUREMENT DATE					COOLING TIME	COUNTING TIME	INTENSITY PER SEC	INTENSITY(TD)	REACTION RATE
1 *	82	12	27	10	5 *	190.0	60.00	3.65806E+03	4.2359137E+03	1.2247654E-25
2 *	82	12	27	11	52 *	297.0	60.00	3.36778E+03	4.2346492E+03	1.2243998E-25
3 *	82	12	27	13	30 *	395.0	60.00	3.15083E+03	4.2723551E+03	1.2353020E-25
4 *	82	12	27	15	8 *	493.0	60.00	2.88917E+03	4.2245690E+03	1.2214852E-25
5 *	82	12	27	16	45 *	590.0	60.00	2.72039E+03	4.2862187E+03	1.2393105E-25

**** A V E R A G E V A L U E ****

REACTION RATE	STANDARD DEVIATION	ERROR[%]
122.9052643E-27	7.7713144E-28	0.6323

**** FOIL CODE N10BI NB2 ****

**** FOIL WEIGHT(GRAMS)= 1.574339E+00 SCALE FACTOR= 2.030000E-08 ****

**** REACTION 93NB(N,2N)92MNB ENERGY= 934.53 SATURATION FACTOR= 5.951740E-03 ****

**** EXPOSURE DATE27-12-82- 22H 2M ****

MEAS NO	MEASUREMENT DATE						COOLING TIME	COUNTING TIME	INTENSITY PER SEC	INTENSITY(TO)	REACTION RATE
1 *	82	12	28	3	25	*	323.0	120.00	1.35978E+03	1.3808138E+03	4.8375760E-25
2 *	82	12	28	5	40	*	458.0	120.00	1.35674E+03	1.3865652E+03	4.8577255E-25
3 *	82	12	28	7	45	*	583.0	120.00	1.35086E+03	1.3887612E+03	4.8654188E-25
4 *	82	12	28	9	52	*	710.0	130.00	1.36654E+03	1.4133609E+03	4.9516019E-25

**** A V E R A G E V A L U E ****

REACTION RATE	STANDARD DEVIATION	ERROR[%]
487.8080584E-27	5.0400579E-27	1.0332

**** FOIL CODE FIER FE2 ****

**** FOIL WEIGHT(GRAMS)= 1.367480E-01 SCALE FACTOR= 1.778000E-08 ****

**** REACTION 56FE(N,P)56MN ENERGY= 846.64 SATURATION FACTOR= 2.359170E-01 ****

**** EXPOSURE DATE27-12-82- 18H 36M ****

MEAS NO	MEASUREMENT DATE						COOLING TIME	COUNTING TIME	INTENSITY PER SEC	INTENSITY(TO)	REACTION RATE
1 *	82	12	27	18	50	*	14.0	33.33	1.91580E+03	2.0424823E+03	1.1533133E-25
2 *	82	12	27	19	33	*	57.0	45.00	1.54567E+03	1.9992289E+03	1.1288898E-25
3 *	82	12	27	22	9	*	213.0	66.67	7.58450E+02	1.9763309E+03	1.1159602E-25

**** A V E R A G E V A L U E ****

REACTION RATE	STANDARD DEVIATION	ERROR(%)
113.2721140E-27	1.8969037E-27	1.6746

**** FOIL CODE INDIU IN2 ****

**** FOIL WEIGHT(GRAMS)= 2.594730E-01 SCALE FACTOR= 2.153000E-08 ****

**** REACTION 115IN(N,N')115MIN ENERGY= 336.25 SATURATION FACTOR= 1.431680E-01 ****

**** EXPOSURE DATE27-12-82- 19H 46M ****

MEAS NO	MEASUREMENT DATE					COOLING TIME	COUNTING TIME	INTENSITY PER SEC	INTENSITY(T0)	REACTION RATE
1 *	82	12	27	20	26 *	40.0	100.00	2.90517E+02	3.2272971E+02	7.9355056E-26
2 *	82	12	27	23	20 *	214.0	120.00	1.81583E+02	3.1588768E+02	7.7672690E-26
3 *	82	12	28	1	22 *	336.0	120.00	1.34612E+02	3.2061774E+02	7.8835750E-26

**** A V E R A G E V A L U E ****

REACTION RATE	STANDARD DEVIATION	ERROR(%)
786.2116471E-28	8.6146608E-28	1.0957

TABLE 8: Activation cross sections at 14,75 MeV

Reaction	$\sigma_{measured}$ (uncorrected) (mb)	Flux (n/cm^2s)	Gamma absorption correction	Impurity Correction	$\sigma_{measured}$ (mb)	$\sigma_{calculated}$ (mb)	$\sigma_{meas}/\sigma_{calc}$
$^{197}Au(n,2n)$	2059,8±4,48%	7,50 E7	0,996	0,99998	2068,0±4,48%	~2000	1,034
$^{27}Al(n,\alpha)$	122,9±3,82%	5,92 E7	0,997	0,99994	123,3±3,82%	116	1,060
$^{93}Nb(n,2n)$	487,8±4,10%	4,92 E7	0,987	0,99837	493,4±4,10%	~400	1,232
$^{56}Fe(n,p)$	113,2±4,52%	5,62 E7	0,998	0,99823	113,2±4,52%	114	0,993
$^{115}In(n,n')$	78,6±4,55%	4,64 E7	0,999	0,999959	78,6±4,55%	99	0,794

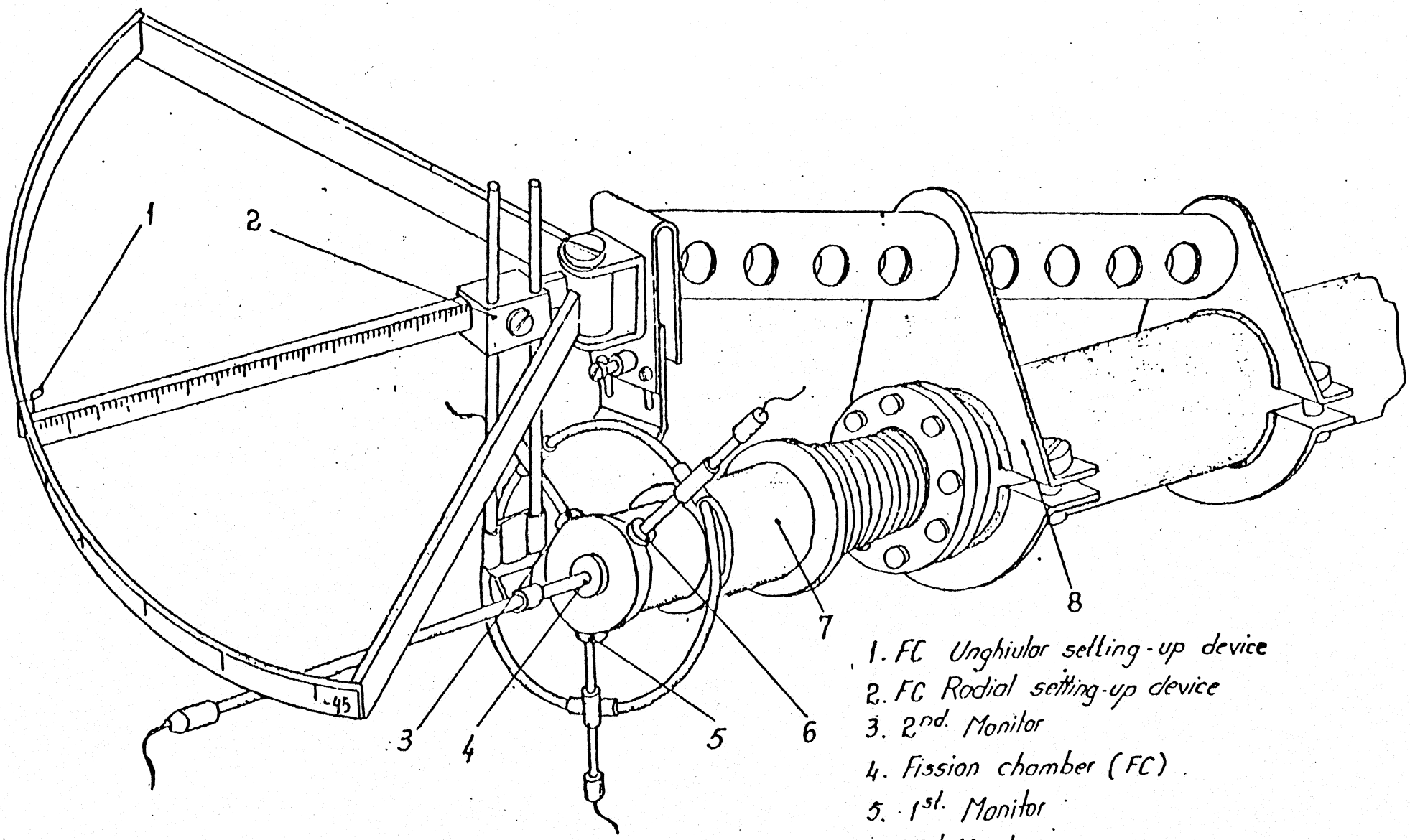

1. FC Unghiular setting-up device
2. FC Radial setting-up device
3. 2nd. Monitor
4. Fission chamber (FC)
5. 1st. Monitor
6. 3nd. Monitor
7. Neutron generator
8. Holder

Fig. 1: Fission chamber setting-up device