INDC(ROM)*001G

ACADEMY OF THE RUMANIAN PEOPLE'S REPUBLIC
INSTITUTE OF ATOMIC PHYSICS 94

A PROPOSED METHOD FOR ABSOLUTE DETERMINATION OF Pu^{239} FISSION CROSS-SECTION at 2200 m/s NEUTRON VELOCITY

By
M. Petraşcu

SUBMITTED TO THE I N DSW G -
MEETING TO BE HELD IN TOKYO 1965

ROMANIA

INDG ARCHIVAL COPY

000099

INDSWG-94

A PROPOSED METHOD FOR ABSOLUTE DETERMINATION OF Pu^{239} FISSION CROSS-SECTION AT 2200 m/s NEUTRON VELOCITY

by

M. Petrașcu

Institute of Atomic Physics, Bucharest, Rumania

The fission cross section of Pu^{239} is of basic importance for many reactor calculations. However at the present time there are still serious discrepancies between the experimental values of σ_f at this isotope [1] .

In this paper there is proposed a method of measurement with the aid of a chopper, in which at least two of the main difficulties are overcame : 1) the determination of the efficiency of the fission detector, 2) the determination of the neutron current irradiating the target area.

I. The efficiency of the fission detector

A particular difficulty in the case of Pu^{239} is due to the high alpha particle activity equal to about 10^9 desintegrations per second and per gram. In a chopper measurement, due to the small neutron fluxes available, of the order of 10^2/sec in a few time of flight channels, one must use high quantities of the order of 1 mg/cm^2 of Plutonium in the target. At this point two difficulties are interfering in the determination of the efficiency. Firstly there appears a pile up background due to α particles that

implies a high discrimination threshold and secondly, due to the thickness of the target the pulse height spectrum of the fission fragments is strongly altered. For a thickness of about 1 mg/cm^2 one cannot expect in a pulse height analysis a curve that differs much from an exponential one, independently how good is the detector resolving power. In order to evaluate the efficiency with a good degree of accuracy, there is proposed to use in the same experiment two plutonium targets, a thin one ($\sim$10 μg/cm^2) and a thick one ($\sim$ 500 μg/cm^2) placed in two distinct compartments of a gaseous scintillation detector, each compartment being viewd by a photomultiplier. One has to know the ratio R of the plutonium densities of the two targets, and to dispose the detector in such a way, that the same neutron beam is passing through both targets.

One should to use the thin target for a pulse height analysis, in order to check the efficiency ε_1 that corresponds to this target, using the pulse height spectrum of the fission fragments. The output of the second compartment after discrimination should be given to a scaler and to a time of flight analyser. The efficiency ε_2 of this compartment is given by the relation

$$\varepsilon_2 = R\ \varepsilon_1 \frac{N_{f_2}}{N_{f_1}}$$

where Nf_2 represents the number of fission fragments counted by the scaler, and Nf_1 the number of fragments contained in the pulse height spectrum registered by the analyser. The efficiency ε_1 equal practically to 1, can be in principle accurately determined with the aid of the pulse height spectrum. R represents the ratio of the plutonium densities from the thin to the thick targets.

In such a time of flight experiment the usefull information is contained in a few channels that correspond to the 2200 m/s neutrons . Now the pulse height information comes from all

time of flight channels such that alltough the plutonium density in the thin target is about two orders of magnitude smaller than in the thick one, the statistical accuracy in determination of ε_2 should be of the same order as in the interesting part of the time of flight spectrum.

II. Determination of the neutron current

For this purpose there is indicated to use a method that is slightly dependent on the accuracies, with which there is known the target density or the isotopic composition. In connection with this, the most suitable method is the detection of the neutrons with the aid of the 478 kev ray from the reaction $B^{10}(n\alpha)Li^7$.

As it is known the mean free path of a thermal neutron in B^{10} is of the order of 2o microns such that it is sufficient to use about 14o microns of B^{10} in order to stop the neutron with an accuracy of 1 part in a thousand. Now let suppose for example that the altogether accuracy in the target thickness and isotopic composition should be $\pm \sigma$. Then to maintain the proposed accuracy in the neutron stoppings one has only to increase the target thickness beyond the calculated value by 2 or 3 σ. However the problem that remains here is to determine the efficiency with which there are detected the gamma rays.

An attractive solution to this point was given by Saplakoglu [2] based on coincidences between alpha and gamma rays, but it is subjected to a high rate of random coincidences. Another way to establish the efficiency should be the activation of a gold foil put in the front of the Boron target, and then to measure absolutely the activity induced in the gold and to compare this activity with the number of counts due to the 412 kev gamma rays, the gold foil being placed at the target position. Here a small

correction is to be taken into account due to the energy diffe - rence between the lithium 478 kev ray and the Mercury 412 kev ray. This correction is of the order of 1%, using a big NaI crystal, but it can be established accurately.

III. Block diagram

In figure 1 there is represented the block diagram of the proposed experiment :

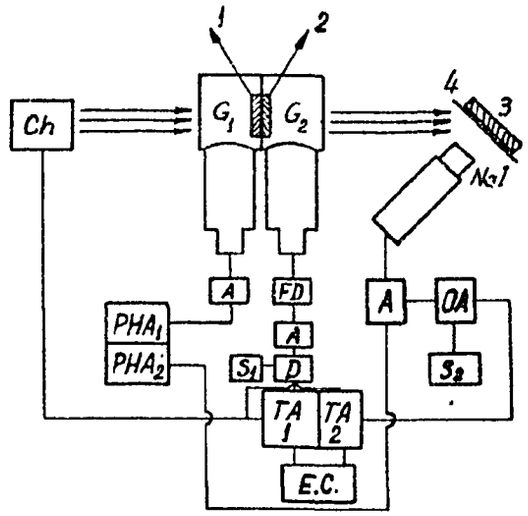

Fig.1.
1,2-thin and thick plutonium target, 3-boron target, 4-gold foil, G_1, G_2- gas scintillation detectors, NaI-natrium iodide detector, PHA1 and PHA2- two sections of a pulse height analyser, TA1 and TA2- two sections of a time of flight analyser, A- pulse amplifier, FD- fast discriminator, D-discriminator, OA-one channel analyser, S_1,S_2-scalers, EC-electron chronometer, Ch-thermal neutron chopper.

The time spectra of fission fragments and of the neutrons are registered respectively by the time analysers Ta1 and TA2.The background should be taken by putting a thin cadmium foil in the neutron beam. The pulses at the output of discriminator D are also registered by scaler S_1, for comparison with pulse height spec - trum from PHA1. The pulses from NaI detector after amplifying are given to the pulse height analyser section PHA2 and also through

the one channel analyser to the time analyser TA2 and to the scaler S_2. To obtain the efficiency of the neutron registration one has to compare the area under the photopeak of the Lithium 478 kev line and the number of counts registered by S_2 with the area of the photopeak of the 412 kev of the gold foil activated at position 4.

An important point is to have precisely determined the number of plutonium atoms in both targets . Possibly it should be indicated the method of target preparation described by Glover and Borrel [3] in which one has to avoid the oxidation of the backing material and then to use a combined method of weighing and of assaying by alpha particles.

The author wishes to express his gratitude to Professors H.Hulubei and C.H.Westcott for many valuable discussions and comments.

References

[1] C.H.Westcott, K.Ekberg, G.C.Hanna, N.J.Pattenden, S.Sanatani and P.M.Attree - A survey to be published in Atomic Energy Review.

[2] A.Saplakoglu, Proc.2nd Geneva Conf., 16, 1o3 (1958).

[3] K.M.Glover and P.A.Borrell, J.of Nuclear Energy, I, 214-217 (1955).