726

International Atomic Energy Agency

INDC(RUM)-6/L

INDC

INTERNATIONAL NUCLEAR DATA COMMITTEE

UNITARY Computer Code System for the Storage, Retrieval and Processing of Experimental Neutron Data

NDS LIBRARY COPY

October 1975

IAEA NUCLEAR DATA SECTION, KÄRNTNER RING 11, A-1010 VIENNA

INDC(RUM)-6/L

UNITARY Computer Code System for the Storage, Retrieval and Processing of Experimental Neutron Data

Reproduced by the IAEA in Austria
October 1975

TABLE OF CONTENTS

INDC(RUM)-6/L I
1975

THE "TECHNOLOGY" OF EVALUATING NEUTRON NUCLEAR DATA IN ROMANIA

S. Râpeanu, G. Vasiliu, N. Mateescu, S. Mateescu
Institute for Atomic Physics
Bucharest, Romania

Abstract

A complete and unitary computerised system for the compilation and evaluation of the neutron nuclear data has been adopted in the Nuclear Data Laboratory from Institute for Atomic Physics in Bucharest. A general scheme of this system is presented. It starts with the generation of the DANEX-library (containing the experimental nuclear data) and generates at finally the DANEM-library (containing evaluated nuclear data). A number of the computer programs used for this and for the processing of the data are quoted, compatible with each other.

The technology of evaluating neutron nuclear data in Romania

S. Râpeanu, G. Vasiliu, N. Mateescu, S. Mateescu

The reactor calculation and design requirements have led, on the world level, to a careful approach of neutron nuclear data which occur in these calculations. Due to the great number of existing experimental and theoretical works, which is continuously increasing, the accuracy of data being better and better, as it is known, this activity is now organized on national and international bases.

For the same reasons, the work of investigation, analysis, and of processing these data in most countries, is computerised, the only method considered efficient at present.

In Romania, the Romanian Committee for Nuclear Data has decided that this activity be carried on by using this highly efficient techniques.

In consequence, in the last years the Nuclear Data Laboratory of the Institute for Atomic Physics - Bucharest has had the assignment to establish the bases of a computerized method for nuclear data evaluation at the level of possibilities offered by the IBM-370/135 computer existing within the institute.

This activity has permanently benefited of the documentation provided by IAEA-NDS, of the conferences and panels organized on problems of nuclear data compilation and evaluation.

At present, a large number of mutually compatible programs are operating, ensuring the input, storage, retrieval, graphic analysis and fitting experimental or theoretically calculated data, including their introduction as evaluated data in a separate

library.

The unitary system of programs, on processing stages is presented in fig. 1. It can be assumed as consisting of two main stages: compilation (with forming the DANEX-experimental data library), and evaluation (with forming the DANEM-evaluated data library). Evaluation, in its turn, is composed of experimental data processing, their analysis, fitting, calculations with reaction theoretical models, checking the consistency of the set of evaluated data and forming the evaluated data library. In the main, this system is applicable for evaluating any type of cross-section.

(A-B) As it may be remarked, the evaluation of a cross-section starts with the bibliographical selection from the CINDA index, and introducing the data by means of the INDEX program, in the DANEX-experimental nuclear data library (compilation stage). The input of data is performed on basis of the systemizing indications recommended by IAEA [1], the adopted format being similar to the CSISRS format as well as that of data storage at IAEA.

It is to be mentioned that also specific values for evaluating thermal neutrons cross-sections are introduced, as for instance frequency distribution functions $f(\omega)$, $g(\nu)$, $\rho(\beta)$, the scattering law $S(\alpha,\beta)$, the Debye-Waller factor, etc.

Besides the data compiled within the laboratory, compiled data provided by IAEA are also introduced in the DANEX-library.

The DANEX tapes are kept in two copies, and the data introduced by us also on punched cards. The data introduction is done reference by reference, representing distinct "entries", the proper figures being introduced as "subentries" for each set of data provided by the work (on reactions types, temperature, excitation levels, etc.).

[1] J.J. Schmidt - IAEA Report 111, 1969, pg. 20

The DANEX tapes represent the starting point of the evaluation stage.

(C) Using a DANEX tape as input, a number of programs allow the selective extraction of some data of interest.

Thus: the SINTEX program has two alternatives and extracts from each subentry contained on a DANEX tape, synthetical information regarding the institute, reference, first author, isotope, data type (section, etc.), the variation range of the measured experimental data, number of points and the access and subaccess number of the entry for the entire content of the tape or selectively for an isotope and given reaction types.

The REDEX program allows the selective retrieval of the entire content of a DANEX tape, which refers to an isotope and a given reaction type.

Although these programs do not participate directly in the evaluation process, their outputs allow the determination of preliminary information and an analysis of the data and their quality.

(D) For the evaluation and to short the computer time are used two programs for processing data, PREG 1 and PREG 2, which create 3 work tapes BL 1 (basic tape), BL 2, and BL 3.

The program PREG 1 selects from a DANEX tape, a minimum of information for identifying the data as well as the numerical data for a certain isotope and reaction type, supplying as the output the BL 1 work tape.

Any subsequent processing of these data can start from this tape avoiding the retrieval of each data on the DANEX tape which is much more ample.

Using the BL 1 tape as input, program PREG 2 partially processes the numerical data (homogenizing the measuring units, renormalization, arranging data according to energies, etc.)

supplying the BL 2 working tape.

In the absence of a display, data plotting, with a view to analyse them, is performed on printer by means of the LISTPLOT program, using tape BL 2 as input. The plotting of experimental cross-sections, energy errors, cross-section errors, as energy functions or other quantities is performed on 11 energy ranges from 10^{-3} eV to 20 MeV. The energy scale is linear, and the cross section scale is linear, logarithmical or square root.

(E) By means of plotting, both of experimental points and errors, realized by the LISTPLOT program, and of experimental details retrieved by program REDEX, it is further proceeded to determine and analyse the gaps, the discrepancies, taking decisions on eliminating some data (F) and the energy ranges which shall be covered by cross-sections calculated on the basis of reaction models (G).

(F) With an adequate choice and using tape BL 1 as input, program PREG 2 eliminates the data established in point (E) creating tape BL 3 which contains the data effectively selected for fitting.

For fitting the use of spline functions of 3rd degree was adopted, as first approximation of the set of chosen experimental points, and optimization by an χ^2 criterion by means of the SPN-SIGMA-FIT program.

The selection of spline function knots is done by a new plotting of data contained on tape BL 3 and weighted by averaged -achieved with the LISTPLOT program.

The program SPN - SIGMA-FIT provides as output the parameters of the cubic polynomials which describe the set of evaluated data and allow the calculation of the cross-section at any energy in the range covered by experimental and calculated points.

(G) Depending on the decisions taken while analyzing the data, on the type of nucleus and cross-section to be evaluated, particular attention is given to the selection of the most adequate reaction models.

For this, the plotting of the experimental and calculated points is done simultaneously, starting from the BL 1 tape, choosing, by the search procedure, the optimum parameters for the computing models.

This allows covering the gaps and taking of some decisions in case of discrepancies of experimental data.

It is resorted to theoretical model calculation, in the thermal field, of solved and unsolved resonances and as necessary in the fast range.

(H) From the data evaluated preliminarily, theoretically and experimentally, it is proceeded to checking the consistency of the cross-sections set and possibly to reevaluation.

(G) After obtaining the consistent set, a lattice of energies is established, also the interpolation laws on various ranges and by means of the program SCB4 is created a tape compatible with program INDA [2], by which the data are introduced in the DANEM evaluated data library [3]. Programs CORA and REDA [2] allow correction and retrieval of evaluated data.

The presented diagram does not claim to be entirely original and uniquely possible.

It is liable to be improved.

---

[2] S. Mateescu, Al. Badescu-Singureanu, N. Deciu - Preprint IFA, DNBR-7-1973

[3] Al.I. Badescu-Singureanu, N. Deciu, D. Gheorghe, N. Mateescu, S. Mateescu, S. Rapeanu, St. Cerc. Fiz. 26, 982-991 (1974)

A number of other aspects like creating libraries of multigroup constants for thermal and fast reactors which also is part of the preoccupations of the Nuclear Data Laboratory of the Institute for Atomic Physics, exceed the framework of this paper.

At the same time, aspects such as testing and adjusting of evaluated nuclear data are stages that follow the evaluation process and are not described here.

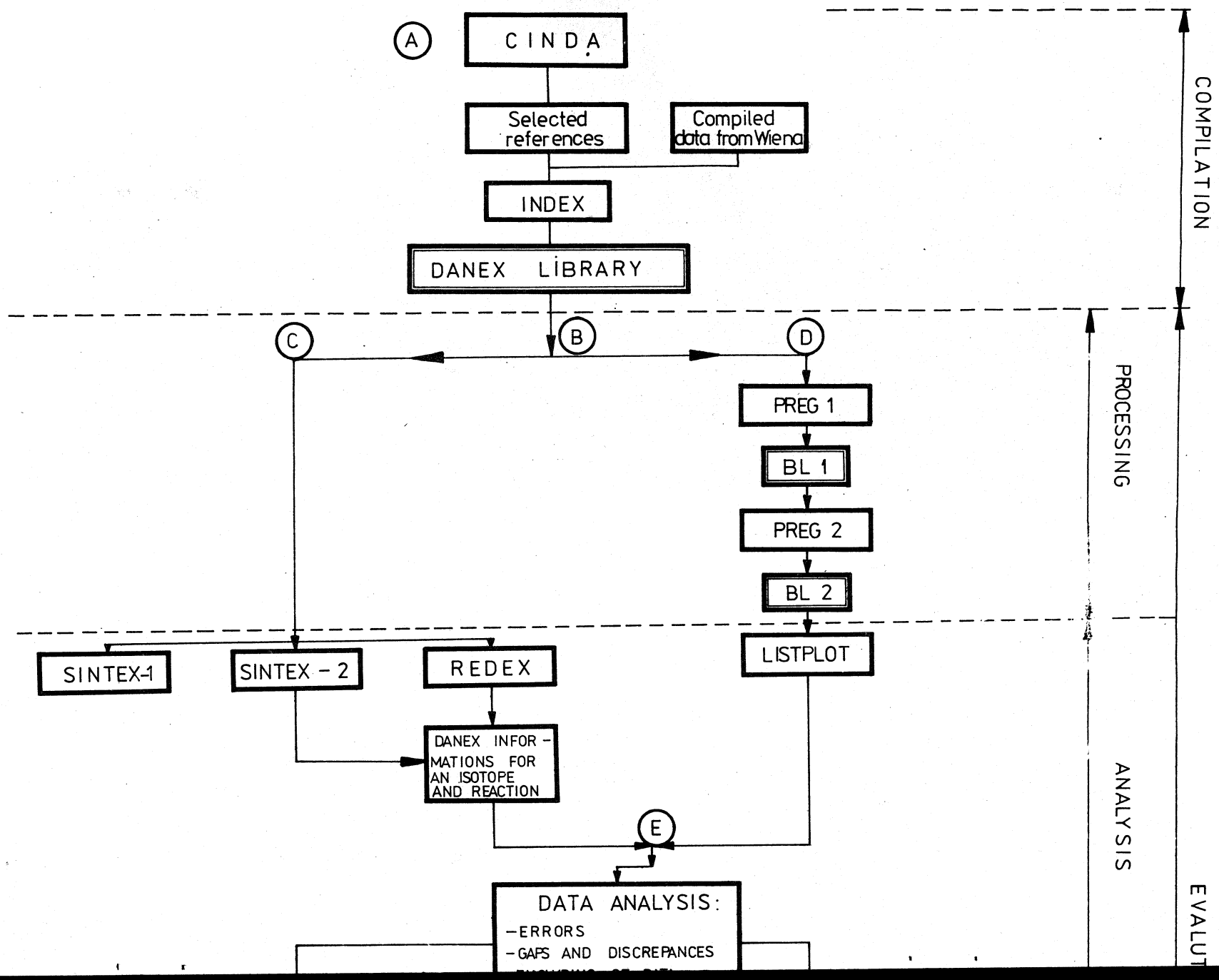
A
CINDA
Selected references
Compiled data from Wiena
INDEX
DANEX LIBRARY
B
C
D
PREG 1
BL 1
PREG 2
BL 2
LISTPLOT
SINTEX-1
SINTEX - 2
REDEX
DANEX INFOR - MATIONS FOR AN ISOTOPE AND REACTION
E
DATA ANALYSIS:
- ERRORS
- GAPS AND DISCREPANCES
COMPILATION
PROCESSING
ANALYSIS
EVALUT

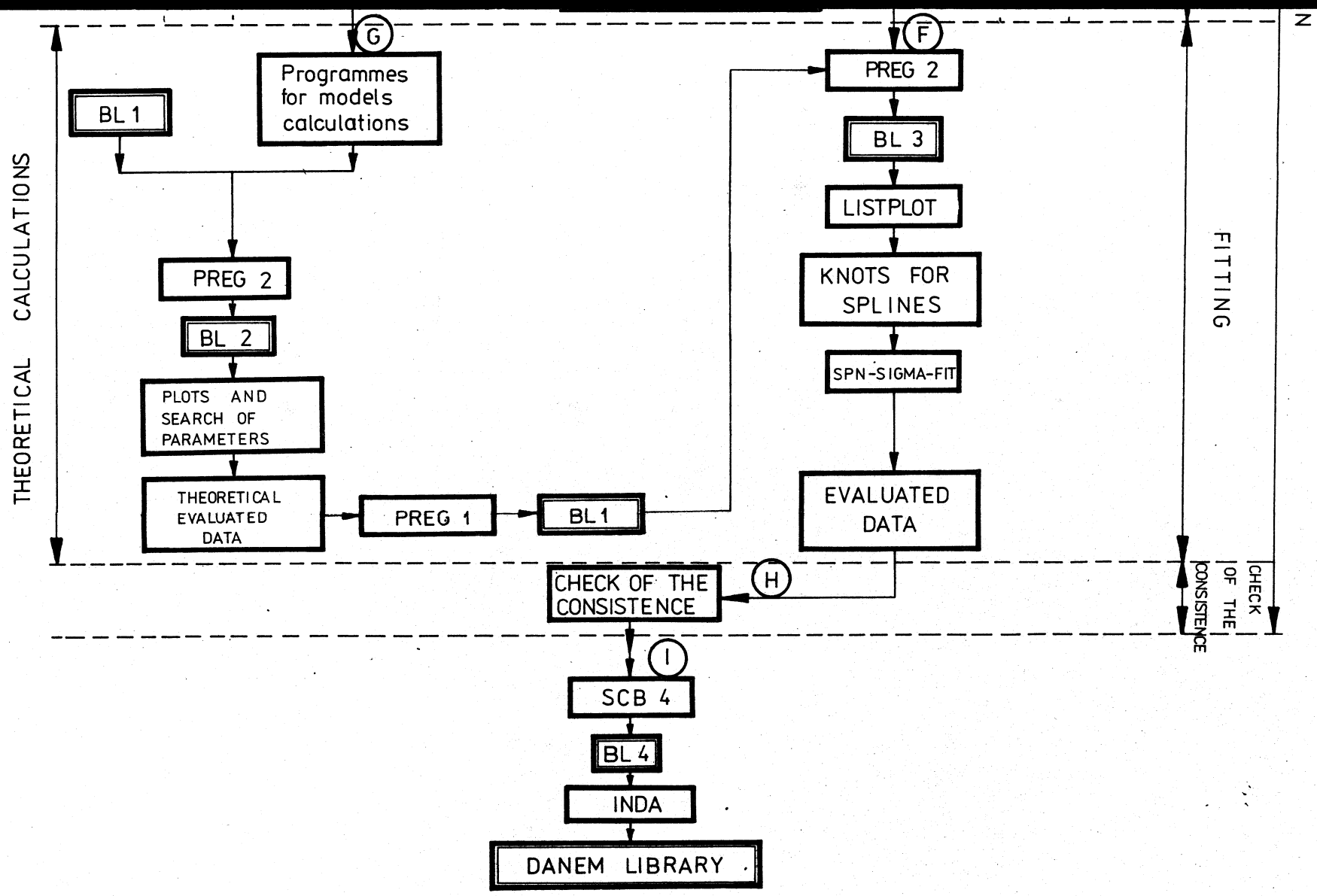

FIG. 1. THE GENERAL SCHEME OF THE EVALUATION PROCESS.

INDC(RUM)-6/L II
1975

INDEX, SINTEX AND REDEX - PROGRAMS FOR THE STORAGE AND RETRIEVAL OF THE EXPERIMENTAL NEUTRON NUCLEAR DATA

S. Mateescu, G. Vasiliu
Institute for Atomic Physics
Bucharest, Romania

Abstract

According to IAEA recommendations concerning computerised neutron nuclear data libraries, the program INDEX assures the storage of the typical neutron nuclear data on magnetic tapes. The program SINTEX retrieves compressed information regarding the institute, laboratory, first author, isotope and reaction type, energy range, number of experimental points, for a fast and qualitative analysis of the data. The program REDEX retrieves and prints all information regarding a given isotope and one or more reaction types.

INDEX, SINTEX, REDEX - programs for storage and retrieval of experimental neutron nuclear data

S. Mateescu, G. Vasiliu

1. Introduction

Analyzing the world experience in the field of nuclear data libraries, and taking into account the IAEA criteria [1] for general structure of such libraries, we have adopted a general system for computerised storage and retrieval of nuclear data.

The principal aspects adopted are very similar with the CSISRS library.

Generally speaking, such types of libraries have the following advantages:

1. a compact storage of a large quantity of information concerning the nuclear data, usually on magnetic tapes, disks, etc

2. they allow a fast retrieval of nuclear data for an isotope and for a reaction type, etc

3. they allow a computerized processing of the data for evaluation

4. they allow the data exchange with other similar laboratories.

2. General structure of the DANEX library

Using magnetic tapes for the storage, the DANEX library contains selected information from literature, from authors, concerning neutron nuclear data, primarily necessary in reactor calculations. For this reason the DANEX library up to now contains only the data for the energy range between 10^{-3} eV and 20 MeV.

[1] J.J. Schmidt - Report IAEA-111, 1969, 23

Each selected paper, according with these two criteria, is completely included and represents a separate "entry".

In such an "entry", there are a number of "subentries", each of them containing nuclear data regarding an isotope, a reaction type, for one or more energy values angle values, etc. General structure of one DANEX tape is given in fig. 1. Each "entry" and "subentry" has a characteristic access number and subaccess number, respectively.

The first figure of the access number represents the geographical area from which the data occurs.

Our convention is the typical one.

1;5 USA and Canada

2;6 Saclay area

3;7 Vienna area

4;8 USSR.

Each entry contains two particular cathegories of information:

The first one contains:

a) bibliographical information as authors, reference, title of paper

b) standard information concerning experimental conditions [1] as experimental facility method, neutron source, sample, type of detected particle, detector, standard, errors, corrections, analysis of the data, remarks

c) common numerical information for all subentries.

These information are contained in the first subentry of each entry. All of them are characterized using a number of keywords according to the CSISRS dictionary [2].

The second information cathegory is contained in the next subentry.

[2] CSISRS dictionaries, BNL - 1974

They are: the measured isotope and quantity (isoquant), specific information of subentry and experimental data given as a table. The data are included using the original units and error cathegories.

The neutron nuclear data types, selected and included in DANEX library are the typical cross sections, as: total, integral and differential scattering cross sections, absorption, elastic, nonelastic, gamma emission, neutron emission, the quantities characterizing thermal neutrons (scattering law $S(\alpha,\beta)$, scattering cross sections for the bounded atom), more than 400 types of data.

Each type of data has its own keyword according to CSISRS-dictionary, except those for the thermal neutrons which have original keywords.

3. The program INDEX

The INDEX program assures the writing on a magnetic tape of the "entries" into a card image format, using a system of grouping on cathegories of information.

The records are control records which allow the selective retrieval of the records with desired information and data records.

The typical structure of an entry on the DANEX tape is shown in fig. 2.

In the last three fields the program writes the access number (NA), the subaccess number (NSE) and the number of the record (NR).

The first record starts with an "ENTRY" record with NSE = 0 and NR = 1, and finishes with an "ENDENTRY" record having NR = 99999 and NSE = 999. In the last record, RSUB represents the number of the subentries in an entry and can be maximum 998.

The subentries start with a "SUBENTRY" record having NSE = 1 and NR = 1 (NANSE = NA and NSE and DA is the storage data) and finishes with a "ENDSUBENT" record having NR = 99999; RSENT being the number of the "effective" records from subentry. The "effective" records are the records between two sequential control records.

The first subentry contains two typical records. The first record type (BIB-1) contains bibliographical information and standard information concerning the experiment, beginning with a "BIB" control record and ending with an "ENDBIB" record.

The second record type ("COMMON-1") contains the common numerical information characterizing the experiment, starting with a "COMMON" record and finishing with an "ENDCOMMON" record.

The COMMON-1 records may be absent, in this case the control record becomes "NOCOMMON" and NCOLC = RECOM = 0.

The other subentries have identical structures, and contain 3 types of record, namely:

1°. "BIB-2" records which are similar with BIB-1 records but contain only the information regarding the particular experimental conditions. The first record always specifies the isotope and the reaction type (ISO-QUANT).

2°. "COMMON-2" records contain quantitative information which are particular for this ISO-QUANT and may become "NOCOMMON" when there are no such information.

3°. "DATA" record type starts with two head records for the data table (one with data types as energy, cross-section, error-1, error-2, error-3, etc. and one with the corresponding measure units). The minimum number of columns in the data table is 2, and the maximum is 6.

Then, there are numerical data records.

Each tape starts with a "TRANS" record having NA = 30000, NSE = 0, NR = 0 and finishes with an "ENDTRANS" record where the RENTR is the number of the storaged entries; NA = 99999, NSE = 999 NR = 99999.

The INPUT cards

The beginning of each entry is formed of a card with control data for the first subentry and of one for each subentry containing the respective control data.

There are the following input cards:

CARD	FORMAT	INPUT-LIST		Description
1	1X,I4	KL	= 0	a new Danex tape will be generated
			≠ 0	an old Danex tape will be completed
2	1X,I5	NA		the access number
	I3	NSE1		the number of subentries
	I6	DA		the date
	I2	NCC		the number of keywords from BIB-1
	I2	REBIB		the number of records from BIB-1
	I1	NCOLC		the number of columns from COMMON-1
	I1	RECOM		the number of records from COMMON-1
3	1X,16A4,A2			the effective BIB1 content
4*	1X,16A4,A2			the effective COMMON-1 content (if it exists)
5	1X,I2	NCC		the number of keywords from BIB2

* Optional cards

	I2	REBIB	the number of records from BIB2
	I1	NCOLC	the number of columns from COMMON-2
	I1	RECOM	the number of records from COMMON-2
	I1	NCOLD	the number of columns from DATA
	I1	REDAT	the number of records with numerical data
6	1X,16A4,A2		the effective BIB-2 content
7*	1X,16A4,A2		the effective COMMON-2 content (if it exists)
8	1X,16A4,A2		the head table
9	1X,16A4,A2		the measure units
10	1X,6E11.4		the numerical data.

The card types 3, 4, 6, 7, 10 are generally sets of cards.

There are no restrictions regarding the sequence of the entries according to certain criteria,as: isotope, data type, reaction type, etc.

The program's characteristic

The program is written in FORTRAN-IV for the IBM-370/135 (IAP) computer and allows the storage for any reference with 3500 experimental points, and with maximum 4 error types.

The necessary of memory is 35 kbytes.

In fig. 3 is presented an output example.

4. The programs for retrieval of the data from DANEX library

The analysis of the experimental data from DANEX library for the evaluation process, involves two stages.

The first stage of the fast and compressed investigation of the existing information into the DANEX library for a given isotope, for the purpose to give a general view regarding the experimental data, the density of the measured points per energy

* Optional cards

range unit.

The second stage of the bibliographycal investigation, includes the complete analysis of the experimental data and involves retrieval of all storaged data and information from the DANEX library for the searched isotope per reaction types.

To these purposes, we realised two retrieval programs: SINTEX (for the compressed selective retrieval of the bibliographycal information) and REDEX (for total selective retrieval of the experimental data).

4.1. The program SINTEX

The program SINTEX extracts from DANEX library some information for a given isotope, per reaction type. These information are: the isotope, the quantity (the cross section type), minimum and maximum limits (eV) of the energy range with experimental data in respective reference, the number of experimental points, the institute (the institute and the country) where the points have been measured, the reference where the paper was published, the first author, as well as the access number.

Optionally, the program may select these information for all entries from a tape, (a), or for a given isotope and one or more given reaction types, (b).

Input cards

The input card types are given below:

CARD	FORMAT	INPUT LIST		Description
1	I5	IXI	= 0	variant (a)
			≠ 0	variant (b)
2	12X,4A4	IC(K),K=1,4		the isotope (only for variant b)
3	1X,3A4	SOL(K),K=1,3		Name of claimant
	1X,9A1	DATA(K),K=1,9		the date

4 28X,A4 IC(5) the reaction type (only for variant (b))

In the last type 4 card ,"END" is written in the columns 30 -32.

The output will be extracted in variant (b) in order of type 4 cards.

Fig. 4, 5 show output examples.

The program's characteristics

The program is written in FORTRAN-IV language and needs 36 kbytes memory. This program is compatible with the IBM-370/135 computer, and uses a DANEX tape as input, and, for variant (b) uses also a scratch tape.

4.2. The program REDEX

The retrieval of the experimental data from DANEX library, is performed with the program REDEX.

The criterion for selective retrieval of the references which contain complete information, or, only for a given cross-section type and for a given isotope, is the identity between the read iso-quante from the tape and the searched isotope from the input cards. A first investigation of the full tape leads to the creation and the storage into the memory of a three dimensional matrix M(K,I,J), J = 1,2 where K is the current number of the entry, I is the current number of the subentry for a particular entry.

The matrix M(K,I,J) may have maximum 1200 elements.

The matrix terms represent the number of records which must be skipped (when there is no identity between the iso-quante and the searched isotope), or extracted (when there is an identity). After this operation, the program imposes the rewinding of the tape and the writing on printer of the selected records.

Input-cards

The card types for input are:

CARD	FORMAT	INPUT LIST		Description
1	I5	ICON	= 0	the data are selected only according to the isotope
			= 1	the data are selected according to the isotope and reaction type
2	12X,5A4	IC(K),K=1,5		the isotope and reaction type

The program's characteristics

The program is in FORTRAN-IV language, and needs 145 kbytes maximum.

The program uses a DANEX tape which is read as input.

5. Conclusions

The set of programs representes an unitary and complete system which answers to the storage problem on tapes and the compressed and extended retrieval problem of the compiled data, concerning the measured neutron experimental cross-sections.

This set allows to perform the automatic processing of the experimental data, with a view of their evaluation. The selected retrieval information are given to the users as listings or magnetic tapes.

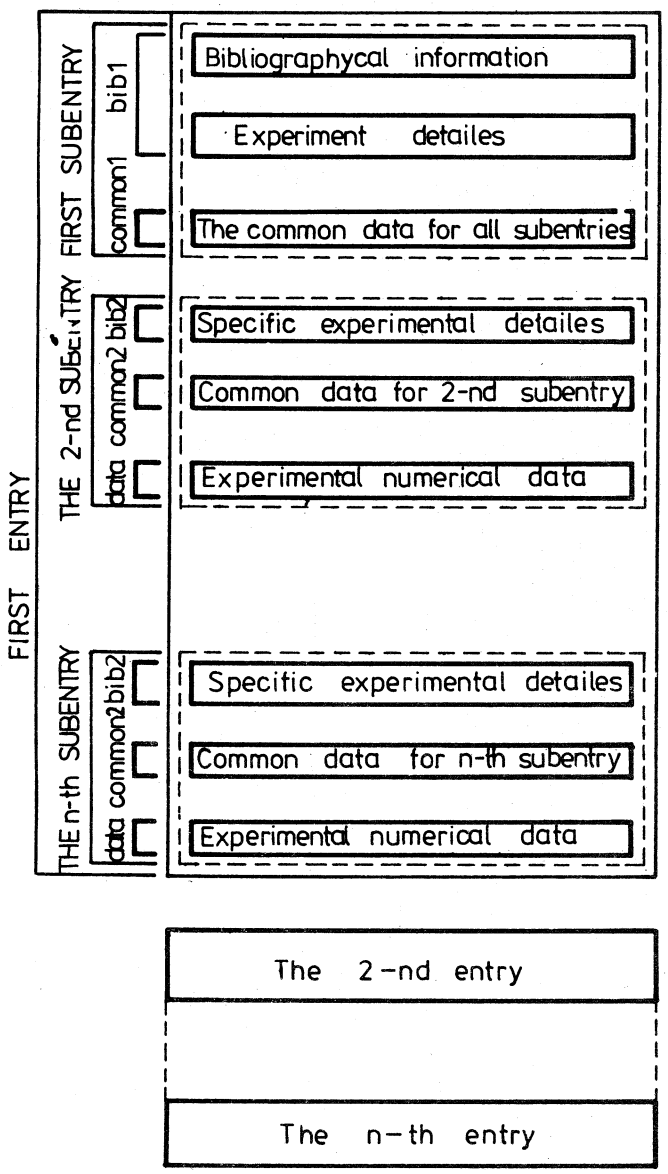

Fig.1. General structure of one DANEX tape.

FIELD 1 Col.1-12	FIELD 2 Col.13-23	FIELD 3 Col.24-34	FIELD 4 Col.35-67	FIELD 5 Col.68-72	FIELD 6 Col.73-75	FIELD 7 76-80
ENTRY	NA	DA		NA	NSE	NR
SUBENTRY	NANSE	DA		NA	NSE	NR
BIB1	NCC	REBIB		NA	NSE	NR
Bibliographycal information + Experimental detailes				NA	NSE	NR
ENDBIB1	REBIB			NA	NSE	NR
COMMON1	NCOLC	RECOM		NA	NSE	NR
Common data for all subentries				NA	NSE	NR
ENDCOMMON1	RECOM			NA	NSE	NR
ENDSUBENT	RSENT			NA	NSE	99999
SUBENT	NANSE	DA		NA	NSE	NR
BIB2	NCC	REBIB		NA	NSE	NR
Specific experimental detailes				NA	NSE	NR
ENDBIB2	REBIB			NA	NSE	NR
COMMON2	NCOLC	RECOM		NA	NSE	NR
Date commune				NA	NSE	NR
ENDCOMMON2	RECOM			NA	NSE	NR
DATA	NCOLD	REDAT		NA	NSE	NR
Experimental numerical data				NA	NSE	NR
ENDDATA	REDATE			NA	NSE	NR
ENDSUBENT	RSENT			NA	NSE	99999
SUBENT	NANSE	DA		NA	NSE	NR
BIB2	NCC	REBIB		NA	NSE	NR
Specific experimental detailes				NA	NSE	NR
ENDBIB2	REBIB			NA	NSE	NR
COMMON2	NCOLC	RECOM		NA	NSE	NR
Date commune				NA	NSE	NR
ENDCOMMON2	RECOM			NA	NSE	NR
DATA	NCOLD	REDAT		NA	NSE	NR
Experimental numerical data				NA	NSE	NR
ENDDATA	REDATE			NA	NSE	NR
ENDSUBENT	RSENT			NA	NSE	99999
ENDENTRY	RSUB			NA	999	99999

Fig. 2. The typical structure of one "entry" from a DANEX tape

```
ENTRY            20008      741109                                          20008  0      1
SUBENT        20008001      741109                                          20008  1      1
BIB                 11          16                                          20008  1      2
INSTITUTE   (2UK ALD)                                                       20008  1      3
REFERENCE   (J,JNE/AB,14,180,61 7)                                          20008  1      4
AUTHOR      (A.V.COHEN)                                                     20008  1      5
TITLE       THE NONELASTIC NEUTRON CROSS-SECTION FOR URANIUM AT             20008  1      6
             13-19 MEV AND BERYLLIUM AT 14 MEV                              20008  1      7
METHOD      (TRNSS) SPHERICAL SHELL TRANSMISSION                            20008  1      8
FACILITY    A.W.R.E. HIGH TENSION ACCELERATOR                               20008  1      9
N-SOURCE    (D-T) REACTION ; A BEAM OF 500-KEV DEITERONS WERE               20008  1     10
             DIRECTED ONTO A COPPER TARGET COATED WITH 0.2MG/CMZ            20008  1     11
             ZIRCONIUM IMPREGNATED WITH TRITIUM FORMING A 14.8MEV           20008  1     12
             N-SOURCE AND A BEAM OF 1.5-2.2MEV DEUTERONS ON A SIMI          20008  1     13
             LAR TARGET FORMING A 13.35-18.54MEV N-SOURCE                   20008  1     14
DETECTOR    (SCIN) PLASTIC SCINTILLAROR 3/4INCH DIAMETER                    20008  1     15
ANALYSIS    THE BETHE FORMULA WAS USED                                      20008  1     16
CORRECTION  FOR DEAD-TIME,BACKGROUND AND FINITE GEOMETRICAL EFFECTS         20008  1     17
HISTORY     (741109L)                                                       20008  1     18
ENDBIB              16           0                                          20008  1     19
NOCOMMON             0           0                                          20008  1     20
ENDSUBENT           19           0                                          20008  199999
SUBENT        20008002      741109                                          20008  2      1
BIB                  1           1                                          20008  2      2
ISO-QUANT   (   4-BE-NAT-    ,NON)                                          20008  2      3
ENDBIB               1           0                                          20008  2      4
NOCOMMON             0           0                                          20008  2      5
DATA                 4           1                                          20008  2      6
EN          EN-ERR      DATA        DATA-ERR                                20008  2      7
MEV         MEV         B           B                                       20008  2      8
 0.1408E 02 0.4000E-01 0.4970E 00 0.3500E-01                                20008  2      9
ENDDATA              3           0                                          20008  2     10
ENDSUBENT            9           0                                          20008  299999
SUBENT        20008003      741109                                          20008  3      1
BIB                  1           1                                          20008  3      2
ISO-QUANT   (   4-BE-NAT-    ,INL)                                          20008  3      3
ENDBIB               1           0                                          20008  3      4
COMMON               1           3                                          20008  3      5
E-LVL                                                                       20008  3      6
MEV                                                                         20008  3      7
 2.4300E+00                                                                 20008  3      8
ENDCOMMON            3           0                                          20008  3      9
DATA                 4           1                                          20008  3     10
EN          EN-ERR      DATA        DATA-ERR                                20008  3     11
MEV         MEV         B           B                                       20008  3     12
 0.1408E 02 0.4000E-01 0.1960E 00 0.4500E-01                                20008  3     13
ENDDATA              3           0                                          20008  3     14
ENDSUBENT           13           0                                          20008  399999
SUBENT        20008004      741109                                          20008  4      1
BIB                  1           1                                          20008  4      2
ISO-QUANT   ( 92- U-NAT-     ,NON)                                          20008  4      3
ENDBIB               1           0                                          20008  4      4
NOCOMMON             0           0                                          20008  4      5
DATA                 4           7                                          20008  4      6
EN          EN-ERR      DATA        DATA-ERR                                20008  4      7
MEV         MEV         B           B                                       20008  4      8
 0.1335E 02 0.1400E 00 0.3250E 01 0.2500E 00                                20008  4      9
 0.1408E 02 0.4000E-01 0.2890E 01 0.5000E-01                                20008  4     10
 0.1504E 02 0.2000E 00 0.3210E 01 0.2300E 00                                20008  4     11
 0.1594E 02 0.2000E 00 0.2870E 01 0.2800E 00                                20008  4     12
 0.1672E 02 0.1500E 00 0.2820E 01 0.2200E 00                                20008  4     13
 0.1745E 02 0.1000E 00 0.3020E 01 0.2500E 00                                20008  4     14
 0.1854E 02 0.2000E 00 0.2420E 01 0.3000E 00                                20008  4     15
ENDDATA              9           0                                          20008  4     16
ENDSUBENT           15           0                                          20008  499999
ENDENTRY             4           0                                          20008999999999
ENTRY            20009      741107                                          20009  0      1
SUBENT        20009001      741107                                          20009  1      1
BIB                  9          11                                          20009  1      2
INSTITUTE   (2GERJUL)                                                       20009  1      3
REFERENCE   (R,JUEL-834-RG,7203)                                            20009  1      4
AUTHOR      (M.BLOSER)                                                      20009  1      5
TITLE       ABSOLUTE MEASUREMENT OF THE BE9(N,2N) CROSS SECTION IN          20009  1      6
             THE ENERGY REGION OF 2.37 TO 3.34 MEV.                         20009  1      7
N-SOURCE    (D-D)                                                           20009  1      8
DETECTOR    (SCIN) 4PI GD LIQUID SCINTILLATOR                               20009  1      9
METHOD      WAS APPLIED SCATTERING BLOCK-METHOD FOR THE MEASUREMENT         20009  1     10
             OF THE NEUTRON INTENSITY                                       20009  1     11
CORRECTION  CORRECTIONS FOR RANDOM ERRORS,BACKGROUND CORRECTIONS            20009  1     12
```

Fig.3. An output example of the program INDEX.

SINTETIC DISPLAY OF DANEX TAPE DTN 93, REQUEST OFI.T.N. 08-09-75

NR.	ISOTOPE-QUANTITY	ARGUMENT/UNITS	ARGUMENT RANGE MIN	MAX	NO. PTS	INSTITUTE	REFERENCE	FIRST AUTHOR	ACCES NO.
1	(92-U-233,ALF)	EN /EV	0.25E-01	0.25E-01	1	CANCRC	C,70HELSINKI,1 28	M.LOUNSBURY	10013
1	((94-PU-239,NF)/(92-U-233,NF))	EN /EV	0.25E-01	0.25E-01	1	CANCRC	C,70HELSINKI,1 28	M.LOUNSBURY	10013
1	((92-U-233,NF)/(92-U-235,NF))	EN /EV	0.25E-01	0.25E-01	1	CANCRC	C,70HELSINKI,1 28	M.LOUNSBURY	10013
2	(8-O-16,EN,RES)	DATA /KEV	0.58E 04	0.72E 04	6	USAWIS	J,NP/A,134,361 69	J.C.DAVIS	10021
3	(79-AU-197,N2N,,GND)	DATA /b	0.22E 01	0.21E 01	1	USASTF	R,AFWL-TR-68-134 69	R.C.BARRALL	10022
4	(8-O-O,EL,DA)	COS-CM/NO-DIM	-0.84E 00	0.94E 00	12	USAORL	J,PR/C,2,124 70	J.L.FOWLER	10028
4	(8-O-O,EL,DA)	COS-CM/NO-DIM	-0.84E 00	0.94E 00	12	USAORL	J,PR/C,2,124 70	J.L.FOWLER	10028
4	(8-O-O,EL,DA)	COS-CM/NO-DIM	-0.82E 00	0.94E 00	12	USAORL	J,PR/C,2,124 70	J.L.FOWLER	10028
4	(8-O-O,EL,DA)	COS-CM/NO-DIM	-0.84E 00	0.94E 00	12	USAORL	J,PR/C,2,124 70	J.L.FOWLER	10028
5	(1-H-2,TOT)	EN /MEV	0.40E 01	0.57E 01	2	USAMHG	R,UNIV-MI-03028-3-T 69	E.F.PARKER	10044
6	(1-H-3,TOT)	EN /MEV	0.23E 01	0.15E 02	242	USABNW	J,PR/C,3,576 71	D.G.FOSTER JR	10047
6	(8-O-16,TOT)	EN /MEV	0.23E 01	0.15E 02	243	USABNW	J,PR/C,3,576 71	D.G.FOSTER JR	10047
6	(90-TH-232,TOT)	EN /MEV	0.23E 01	0.15E 02	242	USABNW	J,PR/C,3,576 71	D.G.FOSTER JR	10047
6	(92-U-233,TOT)	EN /MEV	0.23E 01	0.15E 02	244	USABNW	J,PR/C,3,576 71	D.G.FOSTER JR	10047
7	(92-U-233,NF)	EN /EV	0.10E 02	0.28E 07	2911	USALAS	R,LA-4420,21 70	D.W.BERGEN	10056
8	(92-U-233,ANU)	MU-ADL/EV	-0.28E 01	0.64E 02	70	USAORL	C,70HELSINKI,2 75	G.DE SAUSSURE	10079
8	(92-U-233,AGF)	MU-ADL/EV	-0.28E 01	0.64E 02	70	USAORL	C,70HELSINKI,2 75	G.DE SAUSSURE	10079
8	(92-U-233,AHF)	MU-ADL/EV	-0.28E 01	0.64E 02	70	USAORL	C,70HELSINKI,2 75	G.DE SAUSSURE	10079
8	(92-U-233,AGC,RES)	MU-ADL/EV	-0.28E 01	0.64E 02	70	USAORL	C,70HELSINKI,2 75	G.DE SAUSSURE	10079
8	(92-U-233,AMC,RES)	MU-ADL/EV	-0.28E 01	0.64E 02	70	USAORL	C,70HELSINKI,2 75	G.DE SAUSSURE	10079
9	((92-U-233,NF)/(92-U-235,NF))	EN /KEV	0.24E 00	0.24E 02	26	USAANL	J,NSE,39,361 70	W.K.LEHTO	10084
10	((8-O-16,GEM,DA,PAR)	EN /MEV	0.67E 01	0.11E 02	18	USAORL	J,NSE,40,283 70	J.K.DICKENS	10096
10	((8-O-16,GEM,DA,PAR)	EN /MEV	0.69E 01	0.11E 02	9	USAORL	J,NSE,40,283 70	J.K.DICKENS	10096
10	((8-O-16,GEM,DA,PAR)	EN /MEV	0.74E 01	0.11E 02	13	USAORL	J,NSE,40,283 70	J.K.DICKENS	10096
10	((8-O-16,GEM,DA,PAR)	EN /MEV	0.79E 01	0.11E 02	7	USAORL	J,NSE,40,283 70	J.K.DICKENS	10096
10	((8-O-16,GEM,DA,PAR)	EN /MEV	0.77E 01	0.11E 02	11	USAORL	J,NSE,40,283 70	J.K.DICKENS	10096
10	((8-O-16,GEM,DA,PAR)	EN /MEV	0.79E 01	0.11E 02	7	USAORL	J,NSE,40,283 70	J.K.DICKENS	10096
10	((8-O-16,GEM,DA,PAR)	EN /MEV	0.11E 02	0.11E 02	2	USAORL	J,NSE,40,283 70	J.K.DICKENS	10096
10	((8-O-16,GEM,DA,PAR)	EN /MEV	0.11E 02	0.11E 02	2	USAORL	J,NSE,40,283 70	J.K.DICKENS	10096
10	((8-O-16,GEM,DA,PAR)	EN /MEV	0.11E 02	0.11E 02	2	USAORL	J,NSE,40,283 70	J.K.DICKENS	10096
10	((8-O-16,GEM,DA,PAR)	EN /MEV	0.10E 02	0.11E 02	3	USAORL	J,NSE,40,283 70	J.K.DICKENS	10096
10	((8-O-16,GEM,DA,PAR)	EN /MEV	0.10E 02	0.11E 02	3	USAORL	J,NSE,40,283 70	J.K.DICKENS	10096
10	((8-O-16,GEM,DA,PAR)	EN /MEV	0.11E 02	0.11E 02	2	USAORL	J,NSE,40,283 70	J.K.DICKENS	10096
10	((8-O-16,GEM,DA,PAR)	EN /MEV	0.11E 02	0.11E 02	2	USAORL	J,NSE,40,283 70	J.K.DICKENS	10096
10	((8-O-16,GEM,DA,PAR)	EN /MEV	0.74E 01	0.11E 02	10	USAORL	J,NSE,40,283 70	J.K.DICKENS	10096
10	((8-O-16,GEM,DA,PAR)	EN /MEV	0.85E 01	0.11E 02	6	USAORL	J,NSE,40,283 70	J.K.DICKENS	10096
10	((8-O-16,GEM,DA,PAR)	EN /MEV	0.81E 01	0.11E 02	8	USAORL	J,NSE,40,283 70	J.K.DICKENS	10096
10	((8-O-16,GEM,DA,PAR)	EN /MEV	0.85E 01	0.11E 02	6	USAORL	J,NSE,40,283 70	J.K.DICKENS	10096
10	((8-O-16,GEM,DA,PAR)	EN /MEV	0.81E 01	0.11E 02	8	USAORL	J,NSE,40,283 70	J.K.DICKENS	10096
10	((8-O-16,GEM,DA,PAR)	EN /MEV	0.85E 01	0.11E 02	6	USAORL	J,NSE,40,283 70	J.K.DICKENS	10096
10	(8-O-16,ING)	EN /MEV	0.67E 01	0.11E 02	18	USAORL	J,NSE,40,283 70	J.K.DICKENS	10096
10	(8-O-16,NA,,PAR)	EN /MEV	0.79E 01	0.11E 02	8	USAORL	J,NSE,40,283 70	J.K.DICKENS	10096
10	((8-O-16,GEM,DA,PAR)	EN /MEV	0.11E 02	0.11E 02	2	USAORL	J,NSE,40,283 70	J.K.DICKENS	10096
11	((8-O-16,GEM,DA,PAR)	EN-MIN/MEV	0.97E 01	0.14E 02	4	USAGA)	J,NSE,42,352 70	V.J.ORPHAN	10097
11	((8-O-16,GEM,DA,PAR)	EN-MIN/MEV	0.97E 01	0.14E 02	4	USAGA)	J,NSE,42,352 70	V.J.ORPHAN	10097
11	((8-O-16,GEM,DA,PAR)	EN-MIN/MEV	0.63E 01	0.14E 02	10	USAGA)	J,NSE,42,352 70	V.J.ORPHAN	10097
11	((8-O-16,GEM,DA,PAR)	EN-MIN/MEV	0.63E 01	0.14E 02	10	USAGA)	J,NSE,42,352 70	V.J.ORPHAN	10097
11	((8-O-16,GEM,DA,PAR)	EN-MIN/MEV	0.63E 01	0.14E 02	10	USAGA)	J,NSE,42,352 70	V.J.ORPHAN	10097
11	((8-O-16,GEM,DA,PAR)	EN-MIN/MEV	0.13E 02	0.14E 02	2	USAGA)	J,NSE,42,352 70	V.J.ORPHAN	10097
11	((8-O-16,GEM,DA,PAR)	EN-MIN/MEV	0.63E 01	0.14E 02	10	USAGA)	J,NSE,42,352 70	V.J.ORPHAN	10097
11	((8-O-16,GEM,DA,PAR)	EN-MIN/MEV	0.71E 01	0.14E 02	9	USAGA)	J,NSE,42,352 70	V.J.ORPHAN	10097
11	((8-O-16,GEM,DA,PAR)	EN-MIN/MEV	0.75E 01	0.14E 02	8	USAGA)	J,NSE,42,352 70	V.J.ORPHAN	10097
11	(8-O-16,INL)	EN-MIN/MEV	0.11E 02	0.14E 02	3	USAGA)	J,NSE,42,352 70	V.J.ORPHAN	10097
12	(1-H-2,TOT)	EN /MEV	0.15E 01	0.28E 02	27	USAWIS	J,PR/C,3,1798 71	J.C.DAVIS	10099
13	(92-U-233,NF,,RTE)	EN /EV	0.17E-01	0.11E 01	50	USAORL	J,NSE,42,143 70	L.W.WESTON	10100
13	(92-U-233,NG,,RTE)	EN /EV	0.17E-01	0.11E 01	50	USAORL	J,NSE,42,143 70	L.W.WESTON	10100
13	(92-U-233,ETA)	EN /EV	0.17E-01	0.11E 01	50	USAORL	J,NSE,42,143 70	L.W.WESTON	10100
14	(92-U-233,NU,,DL)	EN /MEV	0.50E-01	0.18E 01	18	USALAS	J,NSE,47,311 72	M.S.KRICK	10117
14	(92-U-233,NU,,DL)	EN /MEV	0.40E 01	0.66E 01	7	USALAS	J,NSE,47,311 72	M.S.KRICK	10117
15	(92-U-233,EL)	EN /KEV	0.18E 04	0.43E 04	198	USARPI	J,NP/A,164,34 71	F.B.SIMPSON	10137
15	(8-O-16,TOT)	EN /KEV	0.60E 03	0.43E 04	538	USARPI	J,NP/A,164,34 71	F.B.SIMPSON	10137
16	(6-C-13,NG/WID)	EN-RES/KEV	0.15E 03	0.15E 03	1	USAORL	J,PR/C,3,1737 71	B.J.ALLEN	10141
16	(6-C-13,NG,,SPA)	EN-DUM/KEV	0.30E 02	0.30E 02	1	USAORL	J,PR/C,3,1737 71	B.J.ALLEN	10141
16	(8-O-16,NG/WID)	EN-RES/KEV	0.43E 03	0.43E 03	1	USAORL	J,PR/C,3,1737 71	B.J.ALLEN	10141
16	(8-O-16,NG,,SPA)	EN-DUM/KEV	0.30E 02	0.30E 02	1	USAORL	J,PR/C,3,1737 71	B.J.ALLEN	10141
16	(3-LI-7,EL/WID)	EN-RES/KEV	0.25E 03	0.25E 03	1	USAORL	J,PR/C,3,1737 71	B.J.ALLEN	10141
16	(6-C-13,EL/WID)	EN-RES/KEV	0.15E 03	0.15E 03	1	USAORL	J,PR/C,3,1737 71	B.J.ALLEN	10141
16	(8-O-16,EL/WID)	EN-RES/KEV	0.43E 03	0.43E 03	1	USAORL	J,PR/C,3,1737 71	B.J.ALLEN	10141
17	(92-U-233,NG,RI)	EN-MIN/EV	0.50E 00	0.50E 00	1	USAKAP	J,NSE,44,180 71	H.M.EILAND	10143
17	(92-U-233,NF,RI)	EN-MIN/EV	0.50E 00	0.50E 00	1	USAKAP	J,NSE,44,180 71	H.M.EILAND	10143

Fig. 4 - An output example of the Program SINTEX (variant a).

REQUEST OF L.D.N. FROM DANEX LIBRARY,REFERENCES REGARDING THE IZOTOP (4-BE- 9-) 18-09-75

NR.	ISOTOPE-QUANTITY	ARGUMENT/UNITS	ARGUMENT RANGE MIN	MAX	NO. PTS	INSTITUTE	REFERENCE		FIRST AUTHOR	ACCES NO.
1(	4-BE- 9- ,TOT)	EN /MEV	0.23E 01	0.15E 02	254	USABNW	J,PR/C,3,576	71	D.GRAHAM FOSTER JR.	10001
2(	4-BE- 9- ,TOT)	EN /GEV	0.97E 01	0.57E 01	1	USAMHG	R,UNIV-MI-03028-3-T	69	E.F.PARKER	10007
3(	4-BE- 9- ,TOT)	EN /MEV	0.50E-00	0.20E 02	3450	USABNS	J,BAP,16,495-AH3-	71	P.B.SCHWARTZ	10010
4(	4-BE- 9- ,TOT)	EN /MEV	0.26E 01	0.60E 01	5	USALAS	J,PR,114,1584	59	J.S.LEVIN	10011
5(	4-BE- 9- ,TOT)	EN /MEV	0.38E 01	0.81E 01	41	USANRL	J,PR,105,193	57	R.O.BONDELID	10021
6(	4-BE- 9- ,TOT)	EN /MEV	0.27E 01	0.27E 01	1	FR SAC	R,CEA-R-3124	67	C	20011
7(	4-BE- 9- ,TOT)	EN /MEV	0.14E 02	0.15E 02	21	HUNDEB	J,NP/A,119,525	68	I.HUNYADI	30010
8(	4-BE- 9- ,TOT)	EN /MEV	0.40E 01	0.40E 01	1	CCPCCP	J,VF,6,910	67	G.V.GORLOV	40002
9(	4-BE- 9- ,TOT)	EN /MEV	0.70E-01	0.55E 01	14	CCPFEI	C,68DUBNA,ACC-68	71	V.V.FILIPOV	40010
10(	4-BE- 9- ,N2N)	EN /MEV	0.26E 01	0.32E 01	4	USAIOW	J,PR,108,99	57	G.J.FISCHER	10020
11(	4-BE- 9- ,N2N)	EN /MEV	0.14E 02	0.14E 02	1	FR PAR	J,JPR,20,621	59	CAO XUAN CHUAN	20004
12(	4-BE- 9- ,N2N)	EN /MEV	0.14E 02	0.14E 02	1	JAPKON	J,JPJ,14,554	59	M.SAKISAKA	20006
13(	4-BE- 9- ,N2N)	EN /MEV	0.24E 01	0.33E 01	6	GERJUL	R,JUEL-834-RG	72	M.BLOSER	20009
14(	4-BE- 9- ,N2N)	EN /MEV	0.20E 01	0.64E 01	27	SWDFOA	J,NP/A,129,305	69	M.HOLMBERG	20012
15(	4-BE- 9- ,N2N)	EN /MEV	0.14E 02	0.14E 02	1	CCPLEB	J,ZET,40,1244	61	S.A.MYACHKOVA	40001
16(	4-BE- 9- ,NON)	EN /MEV	0.26E 01	0.60E 01	5	USALAS	J,PR,114,1584	59	J.S.LEVIN	10011
17(	4-BE- 9- ,NON)	EN /MEV	0.40E 01	0.40E 01	1	CCPCCP	J,VF,6,910	67	G.V.GORLOV	40002
18(	4-BE- 9- , NT)	EN /MEV	0.14E 02	0.14E 02	1	USALAS	J,PR,112,1264	58	M.E.WYMAN	10012
19(	4-BE- 9- , NT)	EN /MEV	0.14E 02	0.15E 02	3	USALRL	J,NP,19,52	60	J.BENVENISTE	10028
20(	4-BE- 9- ,INL)	EN /MEV	0.26E 01	0.50E 01	4	USALAS	J,PR,114,1584	59	J.S.LEVIN	10011
21(	4-BE- 9- ,INL)	EN /MEV	0.14E 02	0.14E 02	1	USALRL	J,PR,111,572	67	J.D.ANDERSON	10015
22(	4-BE- 9- ,INL)	EN /MEV	0.14E 02	0.14E 02	1	CCPCCP	J,JNE,9,159	59	V.M.GORBACHEV	40003
23(	4-BE- 9- , NA)	EN /MEV	0.46E 01	0.58E 01	5	USARIC	J,NP,23,122	61	R.BASS	10027
24(	4-BE- 9- , NG)	EN /MEV	0.25E-07	0.25E-07	1	SWETH	J,HPA,34,483	61	L.JARCZYK	20005
25(	4-BE- 9- , EL, DA)	COS-CM/NO-DIM	-0.89E 00	0.89E 00	10	USALAS	J,PR,114,1584	59	J.S.LEVIN	10011
26(	4-BE- 9- , EL, DA)	COS-CM/NO-DIM	-0.92E 00	0.93E 00	11	USALAS	J,PR,114,1584	59	J.S.LEVIN	10011
27(	4-BE- 9- , EL, DA)	COS-CM/NO-DIM	-0.92E 00	0.93E 00	11	USALAS	J,PR,114,1584	59	J.S.LEVIN	10011
28(	4-BE- 9- , EL, DA)	COS-CM/NO-DIM	-0.87E 00	0.93E 00	8	USALAS	J,PR,114,1584	59	J.S.LEVIN	10011
29(	4-BE- 9- , EL, DA)	COS-CM/NO-DIM	-0.87E 00	0.93E 00	11	USALAS	J,PR,114,1584	59	J.S.LEVIN	10011
30(	4-BE- 9- ,N2N, DA)	EN /MEV	0.37E 01	0.37E 01	1	SWTBAS	J,HPA,31,89	58	R.WAGNER	20002
31(	4-BE- 9- , NA,PAR)	EN /MEV	0.85E 01	0.30E 02	41	GERKFK	P,EANDC-E-127V	70	L.KROPP	20001
32(	4-BE- 9- , NA,PAR)	EN /MEV	0.10E 02	0.30E 02	38	GERKFK	P,EANDC-E-127V	70	L.KROPP	20001
33(	4-BE- 9- , NA,PAR)	EN /MEV	0.12E 02	0.30E 02	31	GERKFK	P,EANDC-E-127V	70	L.KROPP	20001
34(	4-BE- 9- , NA, DA,PAR)	EN /MEV	0.80E 01	0.30E 02	47	GERKFK	P,EANDC-E-127V	70	L.KROPP	20001
35(	4-BE- 9- , NA, DA,PAR)	EN /MEV	0.80E 01	0.30E 02	47	GERKFK	P,EANDC-E-127V	70	L.KROPP	20001
36(	4-BE- 9- , NA, DA,PAR)	EN /MEV	0.85E 01	0.30E 02	46	GERKFK	P,EANDC-E-127V	70	L.KROPP	20001
37(	4-BE- 9- , NA, DA,PAR)	EN /MEV	0.11E 02	0.30E 02	35	GERKFK	P,EANDC-E-127V	70	L.KROPP	20001
38(	4-BE- 9- , NA, DA,PAR)	EN /MEV	0.12E 02	0.30E 02	32	GERKFK	P,EANDC-E-127V	70	L.KROPP	20001
39(	4-BE- 9- , NA, DA,PAR)	EN /MEV	0.18E 02	0.30E 02	16	GERKFK	P,EANDC-E-127V	70	L.KROPP	20001
40(	4-BE- 9- , NA, DA,PAR)	EN /MEV	0.82E 00	0.30E 02	45	GERKFK	P,EANDC-E-127V	70	L.KROPP	20001
41(	4-BE- 9- , NA, DA,PAR)	EN /MEV	0.88E 01	0.30E 02	44	GERKFK	P,EANDC-E-127V	70	L.KROPP	20001
42(	4-BE- 9- , NA, DA,PAR)	EN /MEV	0.10E 02	0.30E 02	39	GERKFK	P,EANDC-E-127V	70	L.KROPP	20001
43(	4-BE- 9- , NA, DA,PAR)	EN /MEV	0.13E 02	0.30E 02	29	GERKFK	P,EANDC-E-127V	70	L.KROPP	20001
44(	4-BE- 9- , NA, DA,PAR)	EN /MEV	0.21E 02	0.30E 02	12	GERKFK	P,EANDC-E-127V	70	L.KROPP	20001
45(	4-BE- 9- , NA, DA,PAR)	EN /MEV	0.98E 01	0.30E 02	39	GERKFK	P,EANDC-E-127V	70	L.KROPP	20001
46(	4-BE- 9- , NA, DA,PAR)	EN /MEV	0.11E 02	0.30E 02	37	GERKFK	P,EANDC-E-127V	70	L.KROPP	20001
47(	4-BE- 9- , NA, DA,PAR)	EN /MEV	0.12E 02	0.30E 02	30	GERKFK	P,EANDC-E-127V	70	L.KROPP	20001
48(	4-BE- 9- , NA, DA,PAR)	EN /MEV	0.16E 02	0.30E 02	22	GERKFK	P,EANDC-E-127V	70	L.KROPP	20001
49(	4-BE- 9- , NA, DA,PAR)	EN /MEV	0.17E 02	0.30E 02	20	GERKFK	P,EANDC-E-127V	70	L.KROPP	20001
50(	4-BE- 9- , NA, DA,PAR)	EN /MEV	0.23E 02	0.30E 02	9	GERKFK	P,EANDC-E-127V	70	L.KROPP	20001
51(	4-BE- 9- , NA, DA,PAR)	ANG-CM/ADEG	0.0	0.18E 03	13	YUGREZ	J,NP/A,96,476	67	G.PAIC	30011
52(	4-BE- 9- ,INL, DA,PAR)	E-MIN /MEV	0.67E 00	0.71E 01	13	USATNC	R,NDL-TR-86	67	S.C.MATHUR	10006
53(	4-BE- 9- ,INL, DA,PAR)	E-MIN /MEV	0.75E 00	0.40E 01	2	USATNC	R,NDL-TR-86	67	S.C.MATHUR	10006
54(	4-BE- 9- ,INL, DA,PAR)	E-MIN /MEV	0.67E 00	0.60E 01	11	USATNC	R,NDL-TR-86	67	S.C.MATHUR	10006
55(	4-BE- 9- ,INL, DA,PAR)	E-MIN /MEV	0.75E 00	0.40E 01	2	USATNC	R,NDL-TR-86	67	S.C.MATHUR	10006
56(	4-BE- 9- ,INL, DA,PAR)	E-MIN /MEV	0.57E 00	0.34E 01	9	USATNC	R,NDL-TR-86	67	S.C.MATHUR	10006
57(	4-BE- 9- ,INL, DA,PAR)	E-MIN /MEV	0.75E 00	0.40E 01	2	USATNC	R,NDL-TR-86	67	S.C.MATHUR	10006
58(	4-BE- 9- ,INL, DA,PAR)	E-MIN /MEV	0.67E 00	0.34E 01	10	USATNC	R,NDL-TR-86	67	S.C.MATHUR	10006
59(	4-BE- 9- ,INL, DA,PAR)	E-MIN /MEV	0.75E 00	0.40E 01	2	USATNC	R,NDL-TR-86	67	S.C.MATHUR	10006
60(	4-BE- 9- ,INL, DA,PAR)	E-MIN /MEV	0.56E 00	0.38E 01	9	USATNC	R,NDL-TR-86	67	S.C.MATHUR	10006
61(	4-BE- 9- ,INL, DA,PAR)	E-MIN /MEV	0.75E 00	0.40E 01	2	USATNC	R,NDL-TR-86	67	S.C.MATHUR	10006

END OF TAPE

Fig.5. An output example of the program SINTEX (variant b)

INDC(RUM)-6/L III
1975

PREG-1 AND PREG-2 - PROGRAMS FOR THE PROCESSING OF THE NEUTRON NUCLEAR DATA

G. Vasiliu, S. Mateescu

Institute for Atomic Physics

Bucharest, Romania

Abstract

The program PREG-1 selects from a DANEX tape a minimum quantity of information for identification of data and numerical data, made uniform the data units, generating an output tape BL1 for a given isotope and reaction type. Any later processing of these data can start with this tape which is shorter than the original DANEX tape. The program PREG-2, using the BL1 tape generated by PREG-1 as input, made the renormalization of the data and excludes some of them, optionally according to input data. As output the program PREG-2 generates the tapes BL2 or BL3, respectively.

PREG 1 and PREG 2 - programs for processing neutronic nuclear data from DANEX library

G. Vasiliu, S. Mateescu

1. Introduction

The evaluation process of the experimental nuclear data involves, in many cases, to homogenize the data units , to renormalize some data, to exclude some data, to plot the data and the corresponding errors, to fit the data and so on.

All these operations are made using distinct computer program which have as input the DANEX-library.

Because the DANEX-tapes contain much more information than those strictly necessary for the searched isotope, we have considered as very useful to achieve intermediate work tapes containing only the necessary data for the later processing.

A tape like this is much more shorter than a DANEX-tape, and contains the input data for the program which made the later processing.

2. The program PREG 1

Using DANEX tapes, the program PREG 1 sort out a minimum of information for identification of the data, and numerical data.

In addition, the program assures the homogenizing of the data units (eV for the energy, barns for cross-sections, etc) and gives different signs necessary for the plotting of data for each data set.

The data thus sorted and partially processed are written on the scratch tape BL 1, whose general structure is presented in fig. 1.

The records are in card-image format, each "entry" from the DANEX-library being represented here by five records containing identification information, and by the records with numerical data.

The significance of the variables from fig. 1 is the following, for each "J" entry:

ARR	(J,I),I = 1,3	- real numbers between 1 and 4 representing flags characterising the errors types
TLAB	(J,I),I = 1,2	- country and the laboratory providing the data
IAUT	(J,I),I = 1,2	- the access and subaccess numbers of the corresponding references from DANEX-tape
REF	(J,I),I = 1,44	- the reference
AUT	(J,I),I = 1,44	- the authors
REDAT		- the number of records with numerical data

Each record with numerical data contains:

E 1	the argument	(energy, angle, etc.)
E 2	the function	(cross-section, scattering law, etc.)
E 3	the argument error	
E 4	the function error	
IE	the access number	
IIE	the attributed sign for the reference	
LIS = 1	a flag for the end of the record.	

Each tape generated by this way has as first record, a special record containing the variable IC(I),I = 1,5 representing the isotope and the cross-section.

At the end of the tape there are two characteristic records pointing the end of file.

The program has also the ability to include, at the end of file, and before its closing, external sets with computed

numerical data, read from cards or another tape using the CIDEX subroutine.

3. Input/output (PREG 1)

The typical input cards are the following:

CARD	FORMAT	INPUT-LIST		Description
1	F5	IXI		control flag
			= 0	writing on tape and partially on printer (without numerical data)
			≠ 0	complete writing on tape and printer
2	I5	IFLAG 1		the number of external data set
	I5	IFLAG 2	= 0	no external data sets
			= 1	the external set is added at the end of BL1 tape already created
			= 2	the BL1 tape is generated with data from DANEX library and external set simultaneously
			= 3	the BL1 tape is generated with external data set only
3	12X,5A4, 47X,I1	(IC(K),K= =1,5),LIS		the isotope and the quantity selected
4	6 E11.4	E1(I),E2(I)		external data set

An output example is given in fig. 2 for IXI = 0, IFLAG1 = 0, IFLAG2 = 0.

4. Program's characteristics

The program is written in FORTRAN IV language compatible with the IBM 370/135 computer.

The memory request is 76 kbytes. The running of the program requests two tape units, for DANEX tape (input) and for BL1

tape (output).

5. The program PREG 2

Using as input the BL1 tape generated by the program PREG1, the program PREG2 made an additional processing of the data as: renormalisation, (using the subroutine RENORM), optional excluding of certain data (using the subroutine FILTRU) and rearrangement of the data according with the increasing order of the argument values.

The program computes also the minimal and maximal values of the function, of the argument errors, and of the function errors (using the subroutine MINMAX).

Optionally, the PREG2 program is able to generate as output two tapes, BL2 or BL3, function of the later destination, of which structures are shown in fig. 3 and fig. 4.

The BL2 tape is destinated for plotting on printer of the experimental renormalized data with different signs for each reference.

The BL3 tape contains the selected data after their analysis and after excluding certain data. These data are arranged according with the increasing order of the argument values.

The BL3 tape once formed, is used for plotting the weighted means of the points, with a view to choose the knots and for their fitting by the cubic spline, using the SPN-SIGMA-FIT program

The signification of the variables appearing in fig. 3 and fig. 4 are the same with those from fig. 1, and additionaly: MM show the value of the ratio EMAX/EMIN, namely:

$$MM = 1 \quad \text{if} \quad EMAX/EMIN \leq 50$$

$$MM = 2 \quad \text{if} \quad EMAX/EMIN \leq 500$$

MM = 3 if EMAX/EMIN > 500

These three records containing EMIN and EMAX refer to the extreme values of the function, of the argument error and of the function error respectively.

These redords are used by the plotting program LISTPLOT.

The BL2 tape is organized on data sets arising from maximum 27 references.

Each reference set starts with a record containing the variables LV and NRR meaning, the number of references (≤ 27) and the number of experimental points respectively, and is finished with a particular record indicating the end of set.

The BL3 tape has a similar structure with the BL2 tape, with only difference that this later contains a single data set which refers to all data from all references from the BL1 tape.

Each tape (BL2 or BL3) starts with a specific record namely the variable IC(I),I = 1,5 meaning the isotope and the reaction type (cross-section) and finishes with a particular record referring to the end of tape.

5. Input/output (PREG 2)

The input card types are given below:

CARD	FORMAT	COLUMNS	INPUT/LIST		Description
1	I5	1-5	IXI	= 0	the BL2 or BL3 tape is generated and the data are partially printed
				≠ 0	complete writing on tape and on printer
2	I2	1-2	IVM	≠ 1	is generated BL2 tape
				= 1	is generated BL3 tape
	I2	5-6	IND2	= 1	use the FILTRU subroutine for excluding of certain

				data	
				≠ 1	no excluding data
3	I5	1-5	NA	access number	of the "entry" for which the renormalization is made
	I3	6-8	NSE	subaccess number	
4	7E11.4	1-77	CREN(I), I=1,REDAT	the renormalization coefficients	
5	I5	1-5	NA	access number	of the "entry" for which is made partial or complete excluding of experim. data
	I3	6-8	NSE	subaccess number	
	E 11.4	9-19	LAW	the lower energy limit	
	E 11.4	20-30	UP	the upper energy limit	

The card types 3,4 and 5 are placed in order of appearing of access numbers NA and increasing of subaccess numbers NSE, into the DANEX tape.

The 4,5 input data types indicates generally, card sets. An output example is given in fig.5 for IXI ≠ 0, IVM = 2.

6. The program's characteristics

The PREG2 program is written in FORTRAN IV language and needs 171 kbytes memory. The program is able to put in order maximum 4000 experimental points arising from maximum 100 references.

The program uses an input tape BL1 and an output tape BL2 or BL3.

The PREG2 program was run on an IBM 370/135 computer.

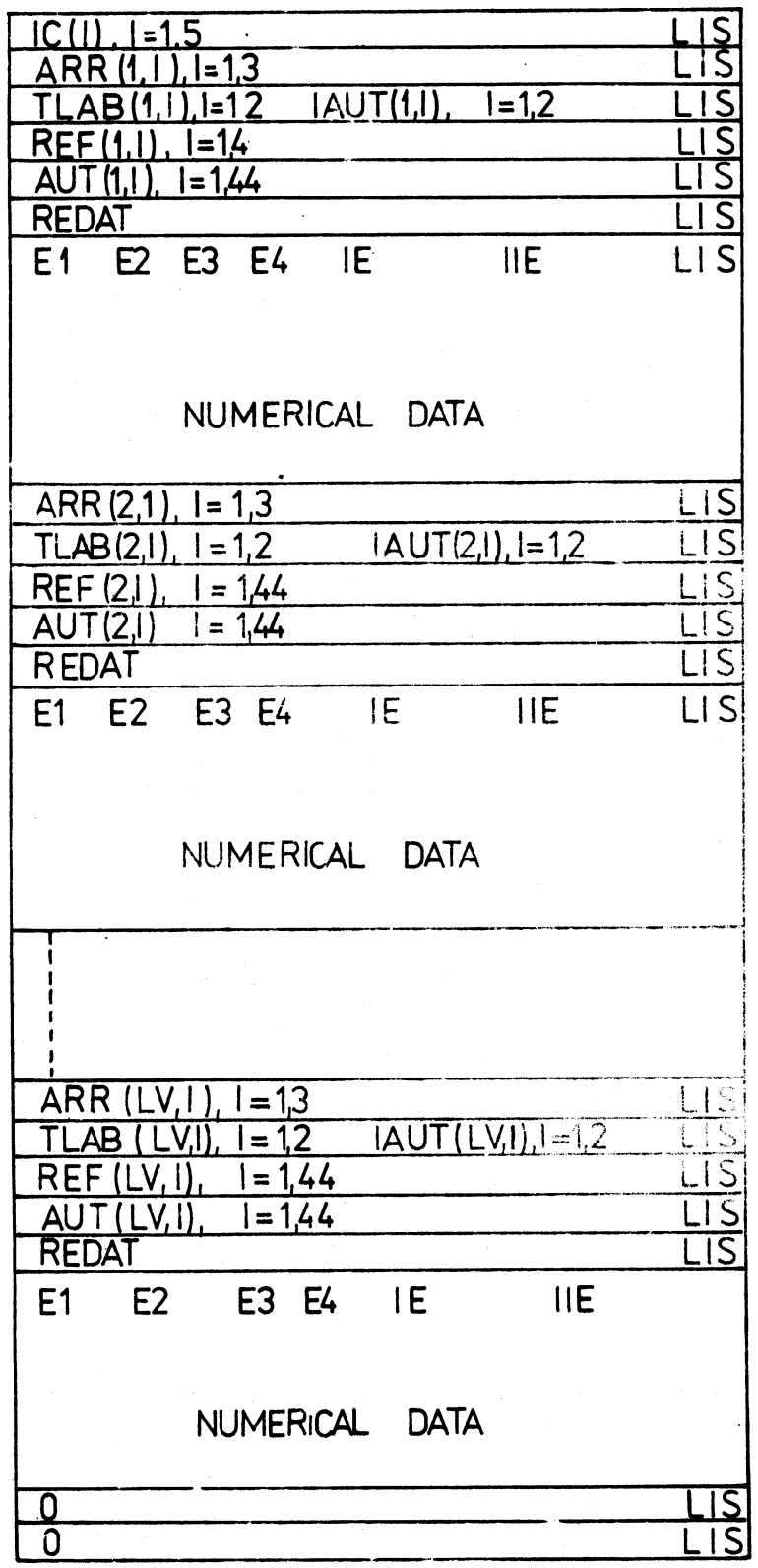

Fig.1. General structure of BL 1 tape.

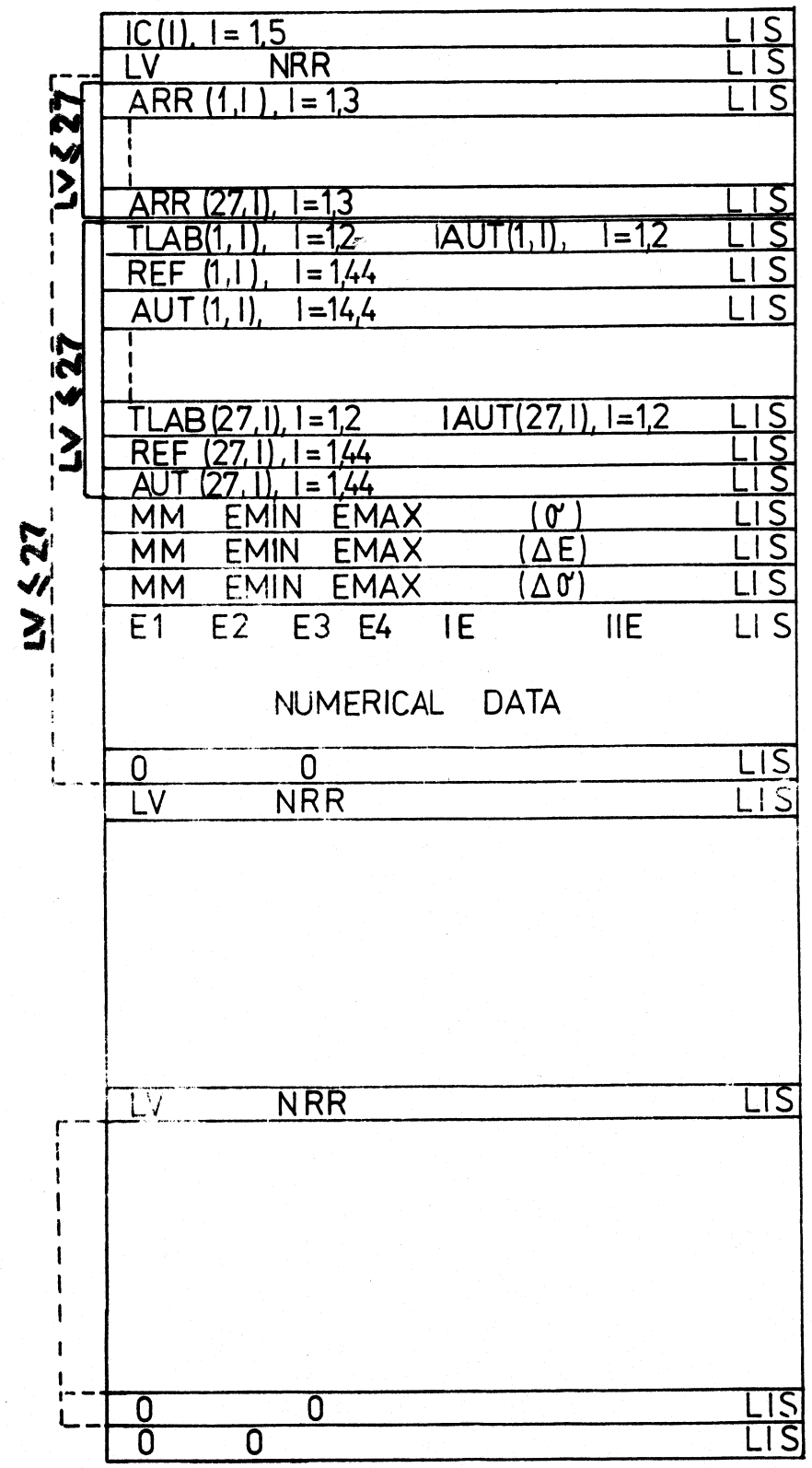

Fig.3. General structure of BL 2 tape.

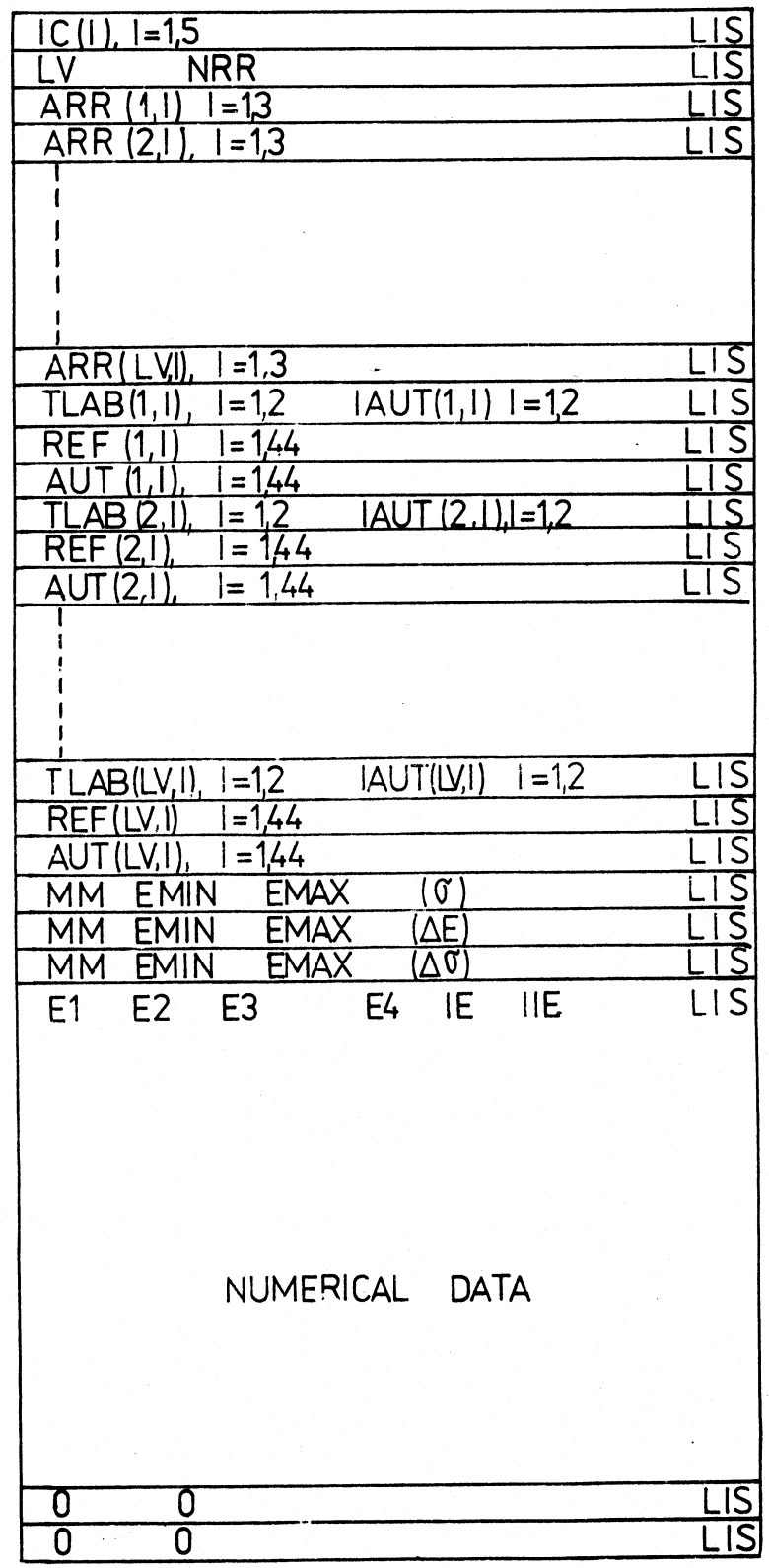

Fig.4. General structure of BL 3 tape.

```
            (  4-BE-  9-    ,N2N)
   4.    3.    3.
1USAIOW10020  2
J,PR,108,99,5710
G.J.FISCHER
          4
 0.2570E 07 0.1600E-01 0.0          0.0         10020*
 0.2690E 07 0.3000E-01 0.0          0.0         10020*
 0.2930E 07 0.3720E 00 0.0          0.0         10020*
 0.3190E 07 0.6780E 00 0.0          0.0         10020*
   4.    3.    4.
2FR PAR20004  2
J,JPR,20,621,5906
CAO XUAN CHUAN
          1
 0.1400E 08 0.4700E 00 0.0          0.1410E 0020004+
   4.    1.    4.
2JAPKON20006  2
J,JPJ,14,554,5905
M.SAKISAKA
          1
 0.1410E 08 0.5400E 00 0.2000E 06 0.9000E-0120006X
   4.    3.    4.
2GERJUL20009  2
R,JUEL-834-RG,7203
M.BLOSER
          6
 0.2370E 07 0.1590E 00 0.0          0.1431E-01200090
 0.2540E 07 0.2850E 00 0.0          0.3420E-01200090
 0.2770E 07 0.3700E 00 0.0          0.4070E-01200090
 0.2990E 07 0.3860E 00 0.0          0.5018E-01200090
 0.3210E 07 0.4050E 00 0.0          0.3645E-01200090
 0.3340E 07 0.4250E 00 0.0          0.3825E-01200090
   4.    3.    4.
2SWDFOA20012  2
J,NP/A,129,305,6905
M.HOLMBERG,J.HANSEN
          27
 0.2000E 07 0.3000E-03 0.0          0.2000E-0220012Y
 0.2100E 07 0.3000E-02 0.0          0.2000E-0220012Y
 0.2200E 07 0.9000E-02 0.0          0.2000E-0220012Y
 0.2250E 07 0.1100E-01 0.0          0.2000E-0220012Y
 0.2300E 07 0.1600E-01 0.0          0.2000E-0220012Y
 0.2350E 07 0.1500E-01 0.0          0.2000E-0220012Y
 0.2400E 07 0.1600E-01 0.0          0.2000E-0220012Y
 0.2450E 07 0.1900E-01 0.0          0.3000E-0220012Y
 0.2500E 07 0.2400E-01 0.0          0.3000E-0220012Y
 0.2550E 07 0.2300E-01 0.0          0.3000E-0220012Y
 0.2600E 07 0.2700E-01 0.0          0.3000E-0220012Y
 0.2620E 07 0.2900E-01 0.0          0.3000E-0220012Y
 0.2650E 07 0.3200E-01 0.0          0.3000E-0220012Y
 0.2680E 07 0.3500E-01 0.0          0.4000E-0220012Y
 0.2750E 07 0.1500E 00 0.0          0.2000E-0120012Y
 0.2800E 07 0.2000E 00 0.0          0.2000E-0120012Y
 0.2850E 07 0.2500E 00 0.0          0.2000E-0120012Y
 0.2900E 07 0.2700E 00 0.0          0.3000E-0120012Y
 0.3100E 07 0.3700E 00 0.0          0.3000E-0120012Y
 0.3200E 07 0.4200E 00 0.0          0.3000E-0120012Y
 0.3400E 07 0.4700E 00 0.0          0.3000E-0120012Y
 0.3600E 07 0.4800E 00 0.0          0.4000E-0120012Y
 0.3800E 07 0.5100E 00 0.0          0.4000E-0120012Y
 0.4200E 07 0.5100E 00 0.0          0.4000E-0120012Y
 0.4800E 07 0.5400E 00 0.0          0.4000E-0120012Y
 0.5800E 07 0.5800E 00 0.0          0.5000E-0120012Y
 0.6400E 07 0.5800E 00 0.0          0.5000E-0120012Y
   4.    3.    4.
4CCPLEB40001  2
J,ZET,40,1244,6105
S.A.MYACHKOVA, V.P.PERELYGIN
          1
 0.1410E 08 0.5400E 00 0.0          0.7000E-0140001H
   0.
   0.
AU FOST EXTRASE DATE DIN LV=  6  REFERINTE
```

Fig.2. An output example of the program PREG 1.

```
              (  4-BE-  9-    ,N2N)
    6    40
   4.    3.    3.
   4.    3.    4.
   4.    1.    4.
   4.    3.    4.
   4.    3.    4.
   4.    3.    4.
1USATOW10020  2
J,PR,108,99,5710
G.J.FISCHER
2FR PAR20004  2
J,JPR,20,621,5906
CAO XUAN CHUAN
2JAPKON20006  2
J,JPJ,14,554,5905
M.SAKISAKA
2GERJUL20009  2
R,JUEL-834-RG,7203
M.BLOSER
2SWDFUA20012  2
J,NP/A,129,305,6905
M.HOLMBERG,J.HANSEN
4CCPLEB40001  2
J,ZET,40,1244,6105
S.A.MYACHKOVA, V.P.PERELYGIN
 3-0.3523E 01-0.1688E 00
 3 0.0         0.5301E 01
 1 0.0         0.1410E 00
 0.2000E 07-0.3523E 01 0.0          0.2000E-0220012
 0.2100E 07-0.2523E 01 0.0          0.2000E-0220012
 0.2200E 07-0.2046E 01 0.0          0.2000E-0220012
 0.2250E 07-0.1959E 01 0.0          0.2000E-0220012
 0.2300E 07-0.1796E 01 0.0          0.2000E-0220012
 0.2350E 07-0.1824E 01 0.0          0.2000E-0220012
 0.2370E 07-0.7986E 00 0.0          0.1431E-0120009
 0.2400E 07-0.1796E 01 0.0          0.2000E-0220012
 0.2450E 07-0.1721E 01 0.0          0.3000E-0220012
 0.2500E 07-0.1620E 01 0.0          0.3000E-0220012
 0.2540E 07-0.5452E 00 0.0          0.3420E-0120009
 0.2550E 07-0.1638E 01 0.0          0.3000E-0220012
 0.2570E 07-0.1796E 01 0.0          0.0        10020
 0.2600E 07-0.1569E 01 0.0          0.3000E-0220012
 0.2620E 07-0.1538E 01 0.0          0.3000E-0220012
 0.2650E 07-0.1495E 01 0.0          0.3000E-0220012
 0.2680E 07-0.1456E 01 0.0          0.4000E-0220012
 0.2690E 07-0.1523E 01 0.0          0.0        10020
 0.2750E 07-0.8239E 00 0.0          0.2000E-0120012
 0.2770E 07-0.4318E 00 0.0          0.4070E-0120009
 0.2800E 07-0.6990E 00 0.0          0.2000E-0120012
 0.2850E 07-0.6021E 00 0.0          0.2000E-0120012
 0.2900E 07-0.5686E 00 0.0          0.3000E-0120012
 0.2930E 07-0.4295E 00 0.0          0.0        10020
 0.2990E 07-0.4134E 00 0.0          0.5018E-0120009
 0.3100E 07-0.4318E 00 0.0          0.3000E-0120012
 0.3190E 07-0.1688E 00 0.0          0.0        10020
 0.3200E 07-0.3768E 00 0.0          0.3000E-0120012
 0.3210E 07-0.3925E 00 0.0          0.3645E-0120009
 0.3340E 07-0.3716E 00 0.0          0.3825E-0120009
 0.3400E 07-0.3279E 00 0.0          0.3000E-0120012
 0.3600E 07-0.3188E 00 0.0          0.4000E-0120012
 0.3800E 07-0.2924E 00 0.0          0.4000E-0120012
 0.4200E 07-0.2924E 00 0.0          0.4000E-0120012
 0.4800E 07-0.2676E 00 0.0          0.4000E-0120012
 0.5800E 07-0.2366E 00 0.0          0.5000E-0120012
 0.6400E 07-0.2366E 00 0.0          0.5000E-0120012
 0.1400E 08-0.3279E 00 0.0          0.1410E 0020004
 0.1410E 08-0.2676E 00 0.5301E 01   0.9000E-0120006
 0.1410E 08-0.2676E 00 0.0          0.7000E-0140001
 0.0         0.0         0.0        0.0            0
    0     0
```

Fig.5. An output example of the program PREG 2.

INDC(RUM)-6/L IV
1975

LISTPLOT - A PROGRAM FOR THE PLOTTING OF THE EXPERIMENTAL AND/OR COMPUTED NEUTRON DATA

G. Vasiliu, S. Mateescu

Institute for Atomic Physics

Bucharest, Romania

Abstract

Using as input the tape BL 2 generated by PREG-2, the program LISTPLOT made on the printer, a plot of nuclear cross sections, energy errors and cross sections errors from different references with different signs. The plot is made on 11 energy subranges between 10^{-3} eV and 20 MeV with particular scale for each range or with a scale for all ranges. According to the extreme values ratios of the quantity to be plotted, the scales can be lin-lin, log-lin, and sqrt-lin. Because of the large number of points the program made averaged values for the all points arising from one reference to be plotted at one energy. This type of plot is used for the analysis and selection of the data according to their quality for evaluation. Using the tape BL 3 with the complete processed data the program permites the plotting with the same sign of the weighted averaged data to choose the knots for their fitting with the program SPN-SIGMA-FIT.

LISTPLOT - a program for the plotting of the experimental and/or computed neutron data

G. Vasiliu, S. Mateescu

1. Introduction

One of the main stages of the evaluation process includes the comparative analysis of experimentaly measured and/or theoretically computed data for each given cross-section and also of errors for data and for incident neutron energy.

The visual analysis of these data, although has a qualitative character, allows to take certain decisions regarding the data with too large errors, the discrepancies, and, also to establish the gaps.

In absence of a display, the LISTPLOT program allows the plotting on printer of data from DANEX-library.

Using BL2 or BL3 tape , with the input data, the program plots the arithmetical average data on references, with different signs ("standard" representation), or the weighted averaged data from all available references, with a single sign ("particular" representation), respectively.

The former plot answers to the visual analysis problem mentioned above.

The latter plot type is used to establish the input data with a view to fit the experimental data by the SPN-SIGMA-FIT program.

2. The program description

The program LISTPLOT performs the plotting of experimental data concerning a given isotope and reaction.

The energy range of interest for the evaluation process (10^{-3} eV - 20 MeV), is subdivided into 11 energy ranges, namely: 10^{-3} - 10^{-2} eV, 10^{-2} - 10^{-1} eV, 10^{-1} - 1 eV, 1 - 10 eV, 10 - 100 eV, 0.1 - 1 KeV, 1 - 10 KeV, 10 - 100 KeV, 0.1 - 1 MeV, 1 - 10 MeV, 10 - 20 MeV.

In each subrange is chosen an "energy step" which assures his covering by maximum 200 equal spaced points.

The energy is represented in a linear scale.

The cross-section is represented in a linear-linear, square root-linear or logarithm-linear scale, according with the ratio of the extreme values of the function ($\leq$ 50, $\leq$ 500 or > 500 respectively).

The corresponding scale is chosen by the program for each energy range, or it is unique for all energy ranges (using a given input option).

For a more detailed analysis of the energy range around 14 MeV, covered by many experimental points generally, the program allows also the plotting of a particular energy range with a given extension.

3. The program and its subroutines

3.1. The main program

The main program, using the input tape BL2 or BL3, with a variable format for reading, selects the values for plotting of each energy subrange (in the "standard" representation case, IVM = 2).

In the "particular" representation case (IVM = 1), the main program performs a weighted average of the cross-sections at the same energy, indifferent of the references from which it comes.

In both cases, the main program calls the "supervisor" subroutine - ANALIZ - going on to the subsequent processing and the data plotting.

3.2. The subroutines

The LISTPLOT program uses 8 subroutines, as it is shown in the flow-chart in fig.1.

1. ANALIZ subroutine is a "supervisor" subroutine which calls in order the following subroutines: MINMAX, EVAL, ILIST, MED (optionally), PLOT, FLIST.

Having established array for the plotting function by the main program, the subroutine ANALIZ computes the number of steps which must be skipped on the abscise between the beginning of the energy range and the first plotting point, and between the last plotting point and the end of the range - to assure the abscise scale linearity.

This subroutine computes also the number of points to be plotted at the same energy.

2. MINMAX subroutine - selects the extreme values EMIN and EMAX of the plotting function in each energy subrange. Also, establishes the plot type: $y = f(x)$, $\sqrt{y} = f(x)$, or $\log y = f(x)$, according to the EMIN/EMAX ratio (≤ 50, ≤ 500 or > 500).

3. EVAL subroutine. The purpose of the EVAL subroutine is to compute the number of steps which must be skipped on abscise between two sequencial points.

4. ILIST subroutine. Computes the step-value on the ordonate scale and points at the beginning of each plot, certain information strictly necessary for its analysis, the plotted isotope and cross-section, the plot type, the energy limits of the range, the step for the advance on the abscise scale.

This subroutine draws and graduates also the ordonate scale, points the lower limit of the energy range, printing the starting point of the abscise.

5. MED subroutine is called when there are more points at some abscise point. In this case, the subroutine MED computes an arithmetical average value for each reference.

6. PLOT subroutine computes the positions on the ordonate scale of the points to be plotted on a gride with 101 columns on the printer, and prints the corresponding signs for the averaged or exact values.

7. FLIST subroutine. Closes the plot and writes the principal information regarding the references whence the data were plotted: the sign, the access number, the authors, the reference and the laboratory.

8. PLOTEX subroutine. In the case of the extended plot of the points from any energy range, performs the corresponding function array. After that, calling the subroutine ANALIZ, assures the plotting.

4. Input/output

The input card types are described below:

	CARD	FORMAT	COLUMNS	INPUT-LIST		Description
x/	1	I2	1-2	IFLAG1	= 0	the plot is made on the energy ranges established by the program.
					≠ 0	the plot is made for an arbitrary energy range, with a given energy step.

x/ The card type 1 is blank when the plots are standard using the energy ranges established by the program(the PLOTEX isn't called)

	E 11.4	3-13	EMI		lower energy limit
	E 11.4	14-24	EMA		uper energy limit
	E 11.4	25-35	PAS		energy step
2	I3	1-3	IVM	= 1	case of the plot of weighted average with a unique sign
				= 2	plot with distinguished signs for each reference
	I3	4-6	MIN		flages to identify the quantities to
	I3	7-9	MFIN		be plotted
	I3	10-12	MPAS		(see the table no.I)
	I3	13-15	JIN		flags to identify the energy
	I3	16-18	JFIN		range to plot (1-11)
	I3	19-21	IND3	= 0	one adequate ordonate scale for each energy range
				≠ 0	unique ordonate scale for all energy ranges

Table no.I

The significance of the input data according to different plot types

MIN	MFIN	MPAS	The plot type
1	1	1	$\sigma = f(E)$
1	2	1	$\sigma = f(E)$ $\Delta E = f(E)$
1	3	1	$\sigma = f(E)$ $\Delta E = f(E)$ $\Delta\sigma = f(E)$
2	2	1	$\Delta E = f(E)$
2	3	1	$\Delta E = f(E)$ $\Delta\sigma = f(E)$
3	3	1	$\Delta\sigma = f(E)$
1	3	2	$\sigma = f(E)$ $\Delta\sigma = f(E)$

For one running, the program is able to perform the plotting of the cross-section for all energy ranges, or a given number of sequencial energy ranges, and also, of the cross-section errors and/or of the energy errors, optionally.

An output example is given in fig.2.

5. The program's characteristics

The program is written in FORTRAN IV language and needs 112 kbytes memory, on the IBM 370/135 computer.

The compilation time is about 3 minutes.

The program uses an input tape (BL2 or BL3 types) prepared by the programs PREG1 and PREG2 with data from the DANEX-library.

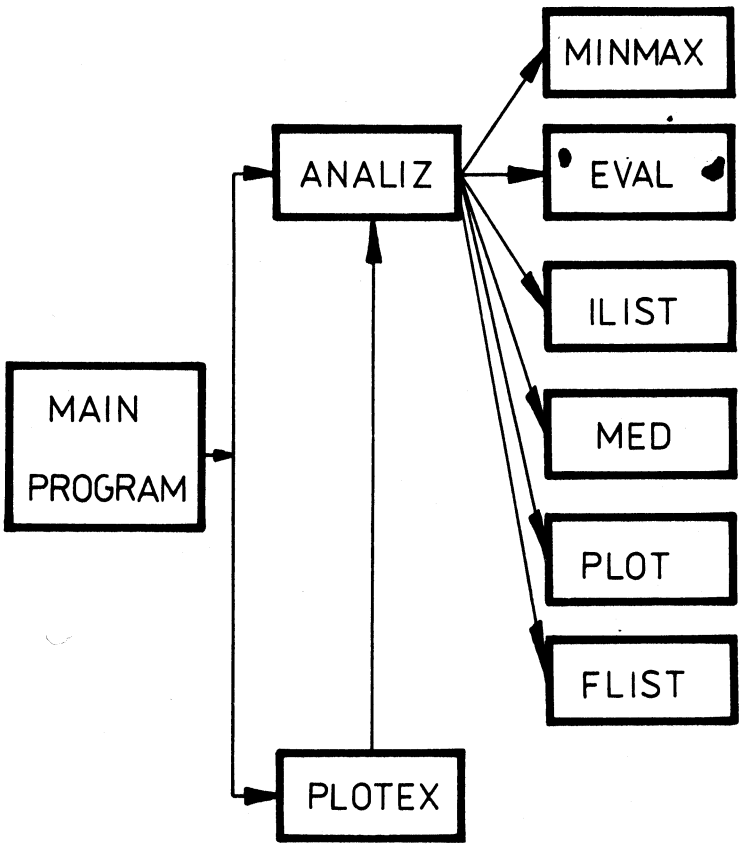

Fig.1. The flow-chart of the program LISTPLOT.

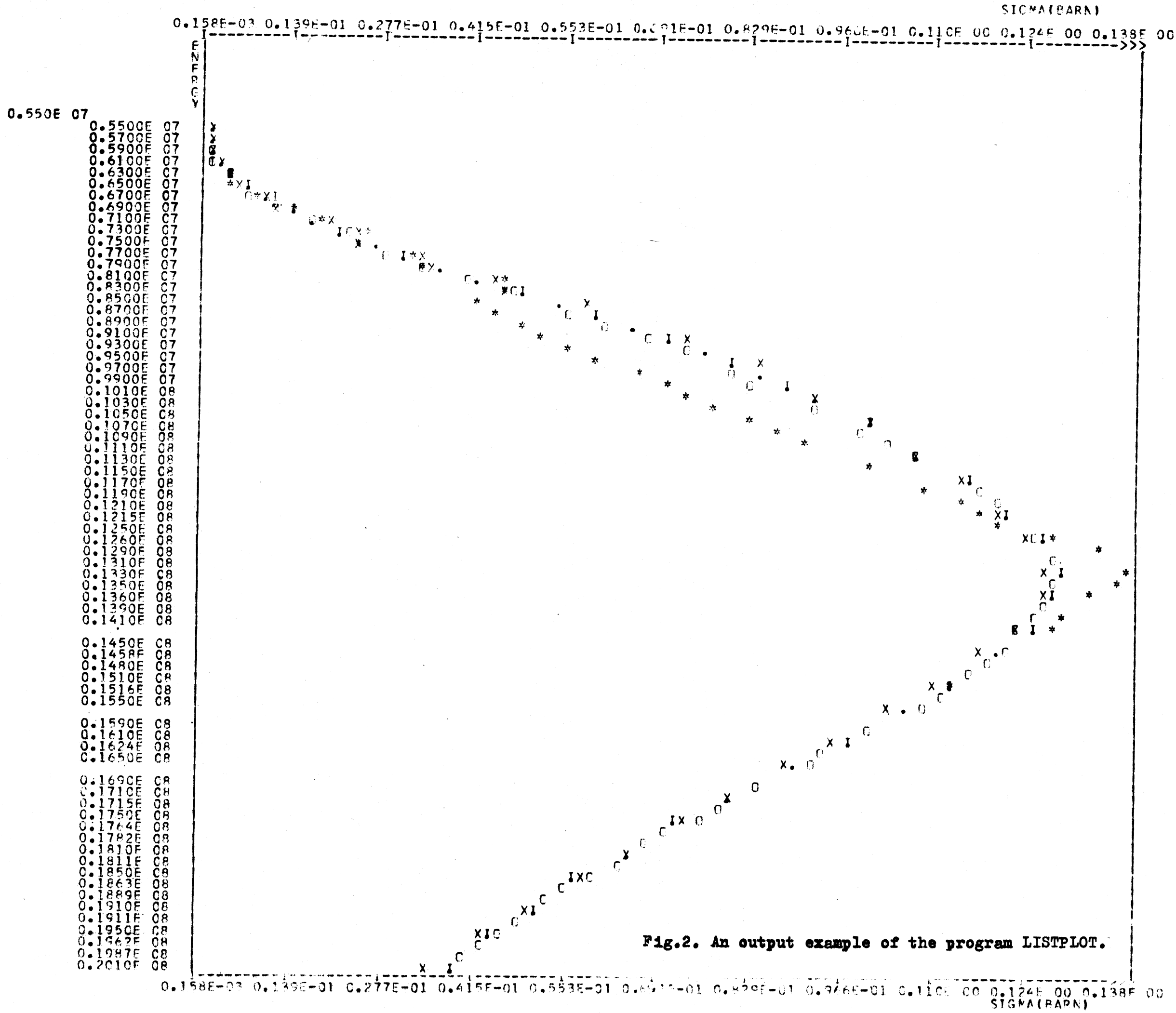

Fig.2. An output example of the program LISTPLOT.

INDC(RUM)-6/L
1975

SPN-SIGMA-FIT - PROGRAM FOR FITTING OF NUCLEAR DATA

S. Râpeanu, G. Vasiliu, S. Mateescu

Institute for Atomic Physics

Bucharest, Romania

Abstract

The program SPN-SIGMA-FIT represents a chain of two programs, SPN for fitting of the data using cubic splines, and the SIGMA for the optimisation of the spline S parameters by χ^2 criterion. Both SPN and SIGMA programs contain subroutines for the calculation of interpolated cross sections, for plotting the experimental, computed and optimised data. They print also tables containing energies, experimental cross-sections, computed cross sections by initial and optimised splines and suitable errors, allowing a fast analysis of the results.

SPN-SIGMA-FIT - program for the fitting of the experimental nuclear data

S. Râpeanu, G. Vasiliu, S. Mateescu

1. Introduction

The program SPN-SIGMA-FIT is a part of a set of programs for processing and evaluation of neutron nuclear data, adapted by the nuclear data laboratory of the I.A.P.

This program performs the fitting of the experimental data and/or theoretical computed data, cross sections at any desired grid of energy.

Using a tape BL 3 as input, created by the program PREG 2 and containing the processed experimental data as well as and computed data if these exist, the program SPN-SIGMA-FIT generates for a first stage, one set of functions which approximately describe the set of data considered.

In a second stage the parameters of the approximate functions are optimised using a χ^2 criterion.

The choosen functions for the interpolation are cubic splines which assures a higher precission than other interpolation methods [1].

The program SPN-SIGMA-FIT is in fact a chain of two programs, corresponding to the stage of the calculation of the spline functions (SPN) and to the stage of their optimization (SIGMA-FIT)

2. The subprogram SPN

This subprogram computes the parameters for the spline functions which describes the variation of the cross sections with

[1] N. Deciu, S. Rapeanu - preprint I.A.P. DNBR-4-1972

the energy between two successive knots.

A subroutine for the plotting added to the subprogram SPN plots on printer function of energy, experimental points, the computed points by the obtained spline functions, the interpolation points.

An attached table performed on the printer allows the error analysis of the computed points.

Then the parameters of the splines are listed on a scratch tape BL, as input data for SIGMA-FIT subprogram.

2.1. The calculation of the spline functions

Having a given number of points (ξ_i, η_i), $(i = 1, \ldots n)$ where ξ_i are the knots, the intermediate values of the functions η between two succesive knots, can be obtained using $(n-1)$ polynomials. If they have the first derivative continuous in knots, and the second derivative is zero in the extreme knots, they are natural spline functions and have the best interpolation properties.

For our problem, the approximation by spline functions of third order is enough, and taking into account Steffenson's notation for the second derivative of the splines, we obtain a system with $(N-2)$ equations, where N is the number of knots:

$$A_1 S''(\xi_{i-1}) + 2B_1 S''(\xi_i) + C_1 S''(\xi_{i+1}) = 6H_1 \qquad (1)$$

where: $S(x)$ is spline function of third order

$$\begin{aligned} A_1 &= \xi_i - \xi_{i-1} \\ B_1 &= \xi_{i+1} - \xi_{i-1} \\ C_1 &= \xi_{i+1} - \xi_i \\ H_1 &= S(\xi_{i+1})C_1 - \frac{B_1}{A_1 C_1} \cdot S(\xi_i) + S(\xi_{i-1})/A_1 \end{aligned} \qquad (2)$$

On the other hand, the function $S(x)$ for x, between ξ_i and

ξ_{i+1} is extended in terms of the second derivatives $S''(\xi)$ by the expression:

$$S(x) = F_2 \cdot (x-\xi_i)(x-\xi_{i+1})[(D_2-x)S''(\xi_i) - (E_2-x) \cdot \cdot S''(\xi_{i+1})] - G_2 x - H_2 \tag{3}$$

where:

$$\begin{aligned} A_2 &= \xi_{i+1} - \xi_i \\ B_2 &= S(\xi_i) - S(\xi_{i+1}) \\ C_2 &= \xi_i S(\xi_{i+1}) - \xi_{i+1} \cdot S(\xi_i) \\ D_2 &= 3A_2 - E_2 \\ E_2 &= \xi_i - A_2 \\ F_2 &= V6A_2 \\ G_2 &= B_2/A_2 \\ H_2 &= C_2/A_2 \end{aligned} \tag{4}$$

Solving the system (1), we obtained the $(N-2)$ second derivatives in knots (from 2 to $N-1$), the complete array of the derivatives being performed by adding the two null derivatives in the knots.

The optimization process of the spline functions involves to know parameters of the splines, for this we formed for each succesive pair of knots one suitable system of equation type (3) taking for x, 4 equal spacied values.

Its solving leads to $(N-1)$ equations:

$$S(x) = A1(i)x^3 + A2(i)x^2 + A3(i)x + A4(i) \qquad i = 1, N-1 \tag{5}$$

which represent the $(N-1)$ splines.

The coefficients $A1(i)$, $A2(i)$, $A3(i)$, $A4(i)$ are the 4 parameters characteristing the spline between 2 successive knots.

2.2. The main program and the subroutines

The flow-chart of the subprogram SPN is presented in the

fig.1.

Using the subroutine CIT BL 3, the main program reads NF the number of the experimental points, and their coordonates from the input tape BL 3.

The subprogram SPN computes, the coefficients A_1, B_1, C_1, H_1 from (2), generates the system of (N-2) equations (1), solves this system of (N-2) equations (1), solves this system and computes for each spline $A_1,...H_2$ from (4), chooses 4 equal spaciated abscises between the extreme knots of each spline, and computes the values of the spline in these points using relation (3).

The subprogram generates for each spline a system of 4 equations, the unknowns being the parameters of the suitable splines.

Then is solved this set of systems of equations and are calculated the values of the spline in the interpolation points.

The solving of the system of equations is made using the subroutine SOLN called from the computer library (RLB-IBM-370/135 [2])which calls the subroutines MATIN, LOC, MAXOUT, SIMQ also.

The subroutine PLOT atributes different signs for the experimental points, knots, interpolation points as well as for experimental points computed again with suitable spline functions, and plots them on printer into a linear scale in energy and cross section.

The subprogram SPN computes the relative errors of the computed by splines cross sections, compared with the experimental cross sections and points them into a table containing the argument, the function and relative error.

Both, plot and table, allow a fast analysis of the

---

[2] System/360-Scientific Subroutine Package Version III

quality of the derivated spline functions, as well as of the approximation order which was included.

Finally, the subprogram calls the subroutine SCB and FORMVR and writes the parameters for the obtained splines on a scratch tape.

Input-cards

Card	Format	Input/list		Description
1	I10	NF	≠ 0	is the number of experimental points which must be read from the cards
			= 0	indicate that the reading is made from a tape with the subroutine CIT BL 3
	I10	M		is the number of interpolation points
	I10	N		is the number of knots
x 2	8F10.2	X1(I), I = 1,NF		are the abscises (energies of the experimental data)
x 3	8F10.2	Y1(I), I = 1,NF		are the ordonates (cross-sections) of the experimental data
x 4	8F10.2	Y2(I), I = 1,NF		are the errors of the experimental data
5	8F10.2	X(I),I=1,N		are the abscises of the knots
6	8F10.2	Y(I),I=1,N		are the ordonates of the knots
7	8F10.2	T(I),I=1,M		are the abscises of the interpolation points

3. The subprogram SIGMA-FIT

The subprogram SIGMA-FIT processes the parameters of the splines obtained with the subprogram SPN, successively, finally supplying the optimised parameters of each spline, the errors of

x There are only for NF ≠ 0

the parameters, as well as the cross-section at experimental energies.

A subroutine for the interpolation, performs the calculation of the cross sections and of the suitable errors, at the energies which aren't in the experimental data set, using the optimised functions.

Another subroutine added to the subprogram SIGMA-FIT plots on printer, the experimental cross-sections, first computed by spline functions, and optimised cross sections at all energies (experimental and for interpolation).

3.1. The main program and the subroutines

The flow-chart of the subprogram SIGMA-FIT is given in the fig. 2.

Using the subroutine FORMVR, which establishes the format for the reading of the data from the tape generated with the subprogram SPN, the subprogram SIGMA-FIT reads the input data (the parameters for the spline functions, the coordonates of the experimental points, the energies for the interpolation).

The principal subroutine for the optimization process of the splines, is the subroutine FUMILI (CERN-D-520), which obtains the optimized parameters of the spline, using an iterative way and an χ^2-criterion.

The subroutine ARITHM computes the function to be optimised, using a suitable analytical expression, and the first derivatives according with the parameters.

In our case, the general expression of the function is a polynomial of 3 order, linear in the parameters (5).

Using the optimised parameters, the subroutine INTERP has the purpose to compute the values of certain cross sections in a

number of given energy points.

Apart from experimental points which have errors, the interpolation points haven't specified the errors.

Taking into account, the parameter's errors, these above errors are computed using the subroutine DELTA.

This subroutine calculates the variations of the suitable cross-section according to all parameter's variations and selects the maximum deviation from the cross section value computes with the optimised splines, by the subroutine ARITHM.

The subroutine PLOT made a plotting of the experimental (O), computed by original splines (x), and computed by optimised splines (+) cross sections, with distinguished signs from parenthesis.

Finally the subroutine PLOT points out a table containing the energies, the experimental cross sections, the computed by initial splines cross sections,their relative errors according with the experimental points, as well as the experimental cross sections computed by optimised parameters of the splines, the suitable relative errors, respectivelly.

These two elements allow a fast and conclusive analysis regarding the quantity of the obtained analytical functions (optimised splines) for the fitting of the experimental data set.

Output examples are given in fig.3 and Table I.

The characteristics of the program SPN-SIGMA-FIT

The language in which the program was written is FORTRAN IV, for IBM 370/135 - I.A.P. computer.

The subprogram SPN asks for 99 kbytes memory and 3,5 minutes compilation time.

The subprogram SIGMA-FIT needs 76 kbytes memory and 6.28

minutes for the compilation process.

The program SPN-SIGMA-FIT uses an input tape BL 3 and one scratch tape for the storage of the intermediate results.

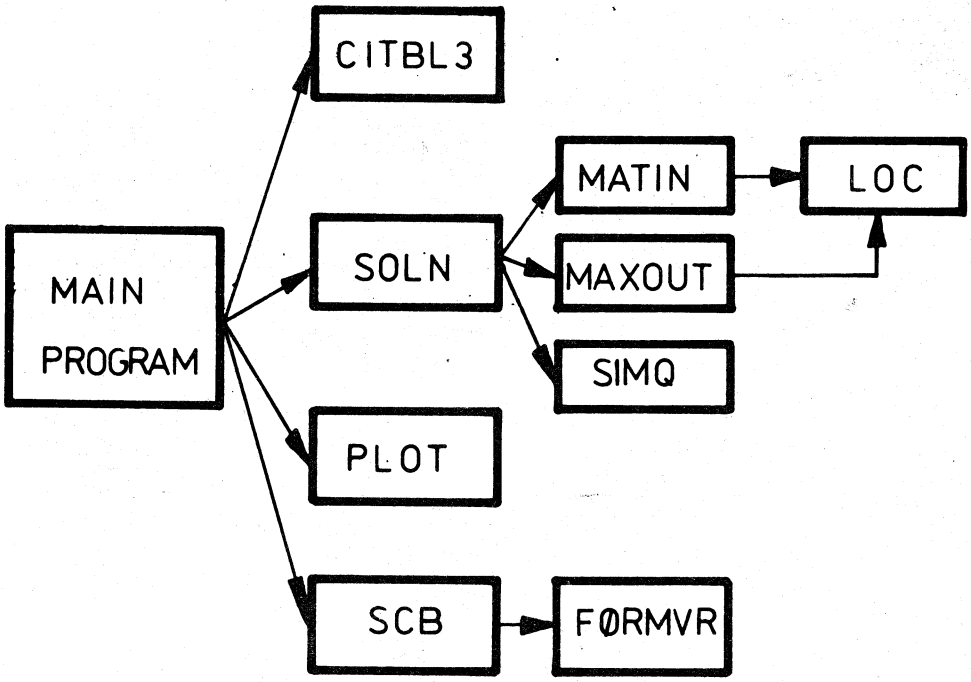

Fig.1. The flow-chart of the subprogram SPN.

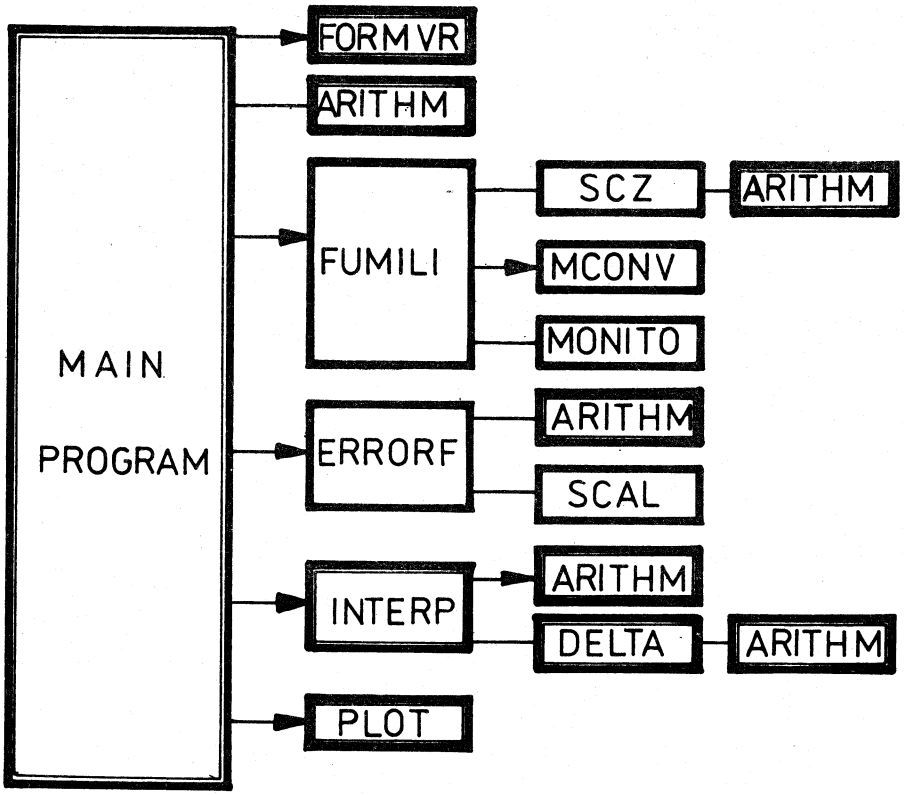

Fig.2. The flow-chart of the subprogram SIGMA-FIT.

Table I. Original and computed cross-sections and their relative errors.

Energy (eV)	Experim. cross-sections (bn)	Computed cross-sections by initial splines	Relative errors (%)	Computed cross-sections by optimised splines	Relative errors (%)
5.500	11.000	10.979	0.191	11.048	0.435
5.550	10.940	10.872	0.618	10.977	0.340
5.600	10.880	10.768	1.031	10.908	0.253
5.650	10.820	10.665	1.432	10.839	0.174
5.700	10.760	10.564	1.819	10.771	0.103
5.750	10.700	10.465	2.193	10.704	0.040
5.850	10.580	10.273	2.900	10.573	0.064
5.900	10.520	10.180	3.233	10.509	0.106
5.950	10.460	10.089	3.551	10.445	0.142
6.000	10.400	9.999	3.854	10.382	0.171
6.050	10.340	9.912	4.143	10.320	0.194
6.150	10.220	9.742	4.675	10.197	0.223
6.250	10.100	9.581	5.144	10.077	0.232
6.300	10.040	9.502	5.354	10.017	0.229
6.350	9.980	9.426	5.548	9.958	0.222
6.400	9.920	9.352	5.725	9.899	0.212
6.450	9.860	9.280	5.885	9.840	0.198
6.500	9.800	9.209	6.027	9.782	0.181
6.550	9.740	9.141	6.152	9.724	0.161
6.600	9.680	9.074	6.259	9.667	0.139
6.650	9.620	9.009	6.347	9.609	0.114
6.750	9.500	8.886	6.466	9.494	0.061
6.800	9.440	8.827	6.497	9.437	0.033
6.850	9.380	8.770	6.508	9.380	0.004
6.900	9.320	8.714	6.499	9.322	0.024
6.950	9.260	8.661	6.469	9.265	0.052
7.000	9.200	8.610	6.418	9.207	0.079
7.050	9.140	8.560	6.346	9.150	0.105
7.100	9.080	8.512	6.251	9.092	0.129
7.150	9.020	8.467	6.135	9.034	0.151
7.200	8.960	8.423	5.995	8.975	0.170
7.300	8.840	8.341	5.646	8.857	0.197
7.350	8.780	8.303	5.436	8.798	0.204
7.400	8.720	8.266	5.201	8.738	0.206
7.450	8.660	8.232	4.940	8.678	0.203
7.500	8.600	8.200	4.654	8.617	0.194
7.550	8.540	8.169	4.342	8.555	0.178
7.600	8.480	8.141	4.003	8.493	0.155
7.650	8.420	8.114	3.636	8.430	0.123
7.700	8.360	8.089	3.241	8.367	0.084
7.800	8.240	8.045	2.366	8.238	0.025
7.850	8.180	8.026	1.883	8.172	0.095
7.900	8.120	8.009	1.371	8.106	0.176
7.950	8.060	7.993	0.827	8.038	0.270
8.000	8.000	7.980	0.251	7.970	0.376

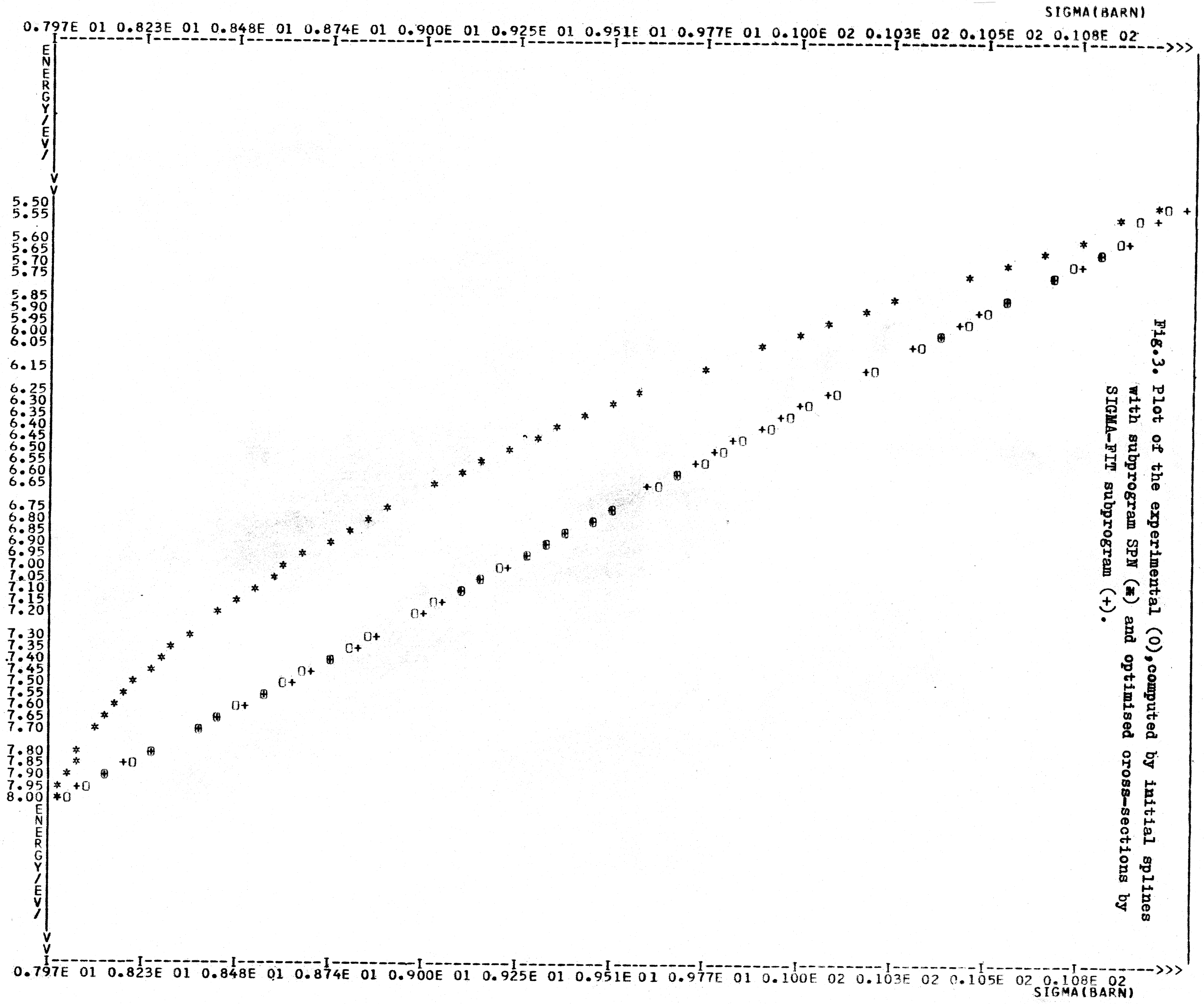

Fig.3. Plot of the experimental (O), computed by initial splines with subprogram SPN (*) and optimised cross-sections by SIGMA-FIT subprogram (+).